Hardware Reference Guide

HP Compaq 6000 Pro Small Form Factor Business PC

© Copyright 2009 Hewlett-Packard Development Company, L.P. The information contained herein is subject to change without notice.

Microsoft, Windows, and Windows Vista are either trademarks or registered trademarks of Microsoft Corporation in the United States and/or other countries.

The only warranties for HP products and services are set forth in the express warranty statements accompanying such products and services. Nothing herein should be construed as constituting an additional warranty. HP shall not be liable for technical or editorial errors or omissions contained herein.

This document contains proprietary information that is protected by copyright. No part of this document may be photocopied, reproduced, or translated to another language without the prior written consent of Hewlett-Packard Company.

Hardware Reference Guide

HP Compaq 6000 Pro Small Form Factor Business PC

First Edition (September 2009)

Document Part Number: 576434-001

About This Book

This guide provides basic information for upgrading this computer model.

WARNING! Text set off in this manner indicates that failure to follow directions could result in bodily harm or loss of life.

CAUTION: Text set off in this manner indicates that failure to follow directions could result in damage to equipment or loss of information.

NOTE: Text set off in this manner provides important supplemental information.

Table of contents

1 Product Features

Standard Configuration Features 1
Front Panel Components 2
Media Card Reader Components 3
Rear Panel Components 4
Keyboard 5
Using the Windows Logo Key 6
Serial Number Location 7

2 Hardware Upgrades

Serviceability Features 8
Warnings and Cautions 8
Removing the Computer Access Panel 9
Replacing the Computer Access Panel 10
Removing the Front Bezel 11
Removing Bezel Blanks 12
Replacing the Front Bezel 13
Using the Small Form Factor Computer in a Tower Orientation 14
Installing Additional Memory 15
DIMMs 15
DDR3-SDRAM DIMMs 15
Populating DIMM Sockets 16
Installing DIMMs 17
Removing or Installing an Expansion Card 20
Drive Positions 26
Installing and Removing Drives 27
System Board Drive Connections 29
Removing an External 5.25-inch Drive 30
Installing an Optical Drive into the 5.25-inch Drive Bay 32
Removing an External 3.5-inch Drive 35
Installing a Drive into the 3.5-inch External Drive Bay 37
Removing and Replacing the Primary 3.5-inch Internal SATA Hard Drive 39
Removing and Replacing a Removable 3.5-inch SATA Hard Drive 43

Appendix A Specifications

Appendix B Battery Replacement

Appendix C External Security Devices

Installing a Security Lock 52
Cable Lock 52
Padlock 53
HP Business PC Security Lock 53
Front Bezel Security 55

Appendix D Electrostatic Discharge

Preventing Electrostatic Damage 57
Grounding Methods 57

Appendix E Computer Operating Guidelines, Routine Care and Shipping Preparation

Computer Operating Guidelines and Routine Care 58
Optical Drive Precautions 59
Operation 59
Cleaning 59
Safety 59
Shipping Preparation 59

Index 60

1 Product Features

Standard Configuration Features

The HP Compaq Small Form Factor features may vary depending on the model. For a complete listing of the hardware and software installed in the computer, run the diagnostic utility (included on some computer models only). Instructions for using the utility are provided in the *Troubleshooting Guide*.

NOTE: The Small Form Factor computer can also be used in a tower orientation. For more information, see Using the Small Form Factor Computer in a Tower Orientation on page 14 in this guide.

Figure 1-1 Small Form Factor Configuration

Front Panel Components

Drive configuration may vary by model.

Figure 1-2 Front Panel Components

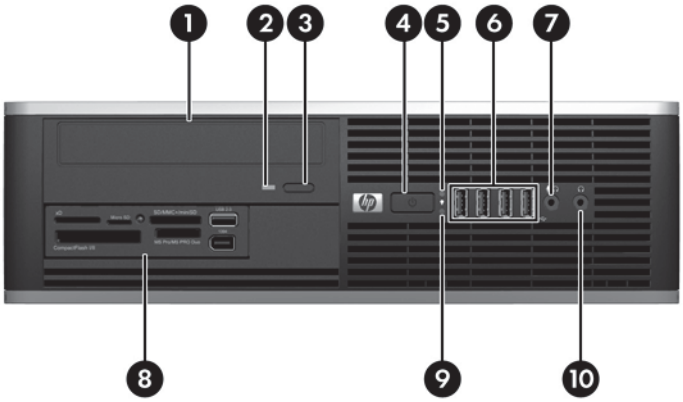

Table 1-1 Front Panel Components

1	5.25-inch Optical Drive[1]	6	USB (Universal Serial Bus) Ports
2	Optical Drive Activity Light	7	Microphone/Headphone Connector
3	Optical Drive Eject Button	8	3.5-inch Media Card Reader (optional)[2]
4	Dual-State Power Button	9	Hard Drive Activity Light
5	Power On Light	10	Headphone Connector

NOTE: When a device is plugged into the Microphone/Headphone Connector, a dialog box will pop up asking if you want to use the connector for a microphone line Line-In device or a headphone. You can reconfigure the connector at any time by double-clicking the Realtek HD Audio Manager icon in the Windows taskbar.

NOTE: The Power On Light is normally green when the power is on. If it is flashing red, there is a problem with the computer and it is displaying a diagnostic code. Refer to the *Troubleshooting Guide* to interpret the code.

[1] Some models are configured with a 5.25-inch bezel blank covering this bay.

[2] Some models are configured with a 3.5-inch bezel blank covering this bay.

Media Card Reader Components

The media card reader is an optional device available on some models only. Refer to the following illustration and table to identify the media card reader components.

Figure 1-3 Media Card Reader Components

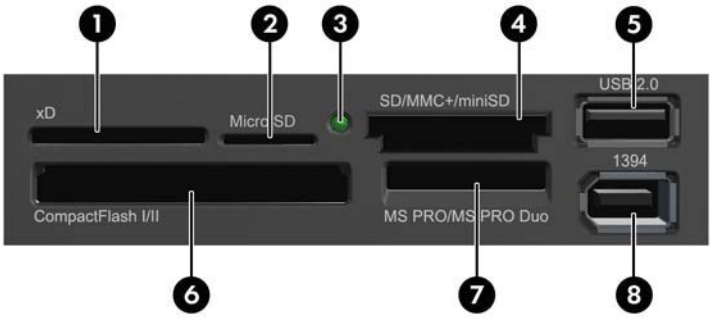

Table 1-2 Media Card Reader Components

No.	Slot	Media		
1	**xD**	• xD-Picture Card (xD)		
2	**MicroSD**	• MicroSD (T-Flash)	• MicroSDHC	
3	**Media Card Reader Activity Light**			
4	**SD/MMC+/miniSD**	• Secure Digital (SD) • Secure Digital High Capacity (SDHC) • MiniSD	• MiniSDHC • MultiMediaCard (MMC) • Reduced Size MultiMediaCard (RS MMC)	• MultiMediaCard 4.0 (MMC Plus) • Reduced Size MultiMediaCard 4.0 (MMC Mobile) • MMC Micro (adapter required)
5	**USB**	• USB (Universal Serial Bus) Port		
6	**CompactFlash I/II**	• CompactFlash Card Type 1	• CompactFlash Card Type 2	• MicroDrive
7	**MS PRO/MS PRO DUO**	• Memory Stick (MS) • MagicGate Memory Stick (MG) • MagicGate Memory Duo	• Memory Stick Select • Memory Stick Duo (MS Duo) • Memory Stick PRO (MS PRO)	• Memory Stick PRO Duo (MS PRO Duo) • Memory Stick PRO-HG Duo • Memory Stick Micro (M2) (adapter required)
8	**1394**	• 1394 Port (available on select models only)		

Rear Panel Components

Figure 1-4 Rear Panel Components

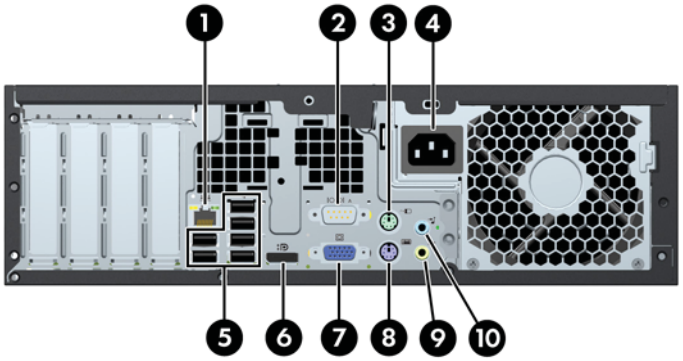

Table 1-3 Rear Panel Components

1		RJ-45 Network Connector	6		DisplayPort Monitor Connector
2		Serial Connector	7		VGA Monitor Connector
3		PS/2 Mouse Connector (green)	8		PS/2 Keyboard Connector (purple)
4		Power Cord Connector	9		Line-Out Connector for powered audio devices (green)
5		Universal Serial Bus (USB)	10		Line-In Audio Connector (blue)

NOTE: Arrangement and number of connectors may vary by model.

An optional second serial port and an optional parallel port are available from HP.

When a device is plugged into the blue Line-In Audio Connector, a dialog box will pop up asking if you want to use the connector for a line-in device or a microphone. You can reconfigure the connector at any time by double-clicking the Realtek HD Audio Manager icon in the Windows taskbar.

The monitor connectors on the system board are inactive when a graphics card is installed in the computer.

If a graphics card is installed into the PCI or PCI Express x1 slot, the connectors on the graphics card and the system board may be used at the same time. Some settings may need to be changed in Computer Setup to use both connectors. For information about setting the boot VGA controller, refer to the *Computer Setup (F10) Utility Guide*.

Keyboard

Figure 1-5 Keyboard Components

Table 1-4 Keyboard Components

1	Function Keys	Perform special functions depending on the software application being used.
2	Editing Keys	Includes the following: Insert, Home, Page Up, Delete, End, and Page Down.
3	Status Lights	Indicate the status of the computer and keyboard settings (Num Lock, Caps Lock, and Scroll Lock).
4	Numeric Keys	Work like a calculator keypad.
5	Arrow Keys	Used to navigate through a document or Web site. These keys allow you to move left, right, up, and down, using the keyboard instead of the mouse.
6	Ctrl Keys	Used in combination with another key; their effect depends on the application software you are using.
7	Application Key[1]	Used (like the right mouse button) to open pop-up menus in a Microsoft Office application. May perform other functions in other software applications.
8	Windows Logo Keys[1]	Used to open the Start menu in Microsoft Windows. Used in combination with other keys to perform other functions.
9	Alt Keys	Used in combination with another key; their effect depends on the application software you are using.

[1] Keys available in select geographic regions.

Using the Windows Logo Key

Use the Windows Logo key in combination with other keys to perform certain functions available in the Windows operating system. Refer to Keyboard on page 5 to identify the Windows Logo key.

Table 1-5 Windows Logo Key Functions

The following Windows Logo Key functions are available in Microsoft Windows XP and Microsoft Windows Vista.	
Windows Logo Key	Displays or hides the Start menu
Windows Logo Key + d	Displays the Desktop
Windows Logo Key + m	Minimizes all open applications
Shift + Windows Logo Key + m	Undoes Minimize All
Windows Logo Key + e	Launches My Computer
Windows Logo Key + f	Launches Find Document
Windows Logo Key + Ctrl + f	Launches Find Computer
Windows Logo Key + F1	Launches Windows Help
Windows Logo Key + l	Locks the computer if you are connected to a network domain, or allows you to switch users if you are not connected to a network domain
Windows Logo Key + r	Launches the Run dialog box
Windows Logo Key + u	Launches the Utility Manager
Windows Logo Key + Tab	Windows XP - Cycles through the Taskbar buttons Windows Vista - Cycles through programs on the Taskbar using the Windows Flip 3-D
In addition to the Windows Logo Key functions described above, the following functions are also available in Microsoft Windows Vista.	
Ctrl + Windows Logo Key + Tab	Use the arrow keys to cycle through programs on the Taskbar by using Windows Flip 3-D
Windows Logo Key + Spacebar	Brings all gadgets to the front and select Windows Sidebar
Windows Logo Key + g	Cycles through Sidebar gadgets
Windows Logo Key + u	Launches Ease of Access Center
Windows Logo Key + any number key	Launches the Quick Launch shortcut that is in the position that corresponds to the number (for example, Windows Logo Key + 1 launches the first shortcut in the Quick Launch menu)

Serial Number Location

Each computer has a unique serial number and product ID number in the location shown below. Keep these numbers available for use when contacting customer service for assistance.

Figure 1-6 Serial Number and Product ID Location

2 Hardware Upgrades

Serviceability Features

The computer includes features that make it easy to upgrade and service. No tools are needed for most of the installation procedures described in this chapter.

Warnings and Cautions

Before performing upgrades be sure to carefully read all of the applicable instructions, cautions, and warnings in this guide.

⚠ **WARNING!** To reduce the risk of personal injury from electrical shock, hot surfaces, or fire:

Disconnect the power cord from the wall outlet and allow the internal system components to cool before touching.

Do not plug telecommunications or telephone connectors into the network interface controller (NIC) receptacles.

Do not disable the power cord grounding plug. The grounding plug is an important safety feature.

Plug the power cord in a grounded (earthed) outlet that is easily accessible at all times.

To reduce the risk of serious injury, read the *Safety & Comfort Guide*. It describes proper workstation, setup, posture, and health and work habits for computer users, and provides important electrical and mechanical safety information. This guide is located on the Web at http://www.hp.com/ergo.

WARNING! Energized and moving parts inside.

Disconnect power to the equipment before removing the enclosure.

Replace and secure the enclosure before re-energizing the equipment.

△ **CAUTION:** Static electricity can damage the electrical components of the computer or optional equipment. Before beginning these procedures, ensure that you are discharged of static electricity by briefly touching a grounded metal object. See Appendix D, Electrostatic Discharge on page 57 for more information.

When the computer is plugged into an AC power source, voltage is always applied to the system board. You must disconnect the power cord from the power source before opening the computer to prevent damage to internal components.

Removing the Computer Access Panel

1. Remove/disengage any security devices that prohibit opening the computer.
2. Remove all removable media, such as compact discs or USB flash drives, from the computer.
3. Turn off the computer properly through the operating system, then turn off any external devices.
4. Disconnect the power cord from the power outlet and disconnect any external devices.

   △ **CAUTION:** Regardless of the power-on state, voltage is always present on the system board as long as the system is plugged into an active AC outlet. You must disconnect the power cord to avoid damage to the internal components of the computer.

5. If the computer is on a stand, remove the computer from the stand.
6. Lift up on the access panel handle (1) then lift the access panel off the computer (2).

   Figure 2-1 Removing the Access Panel

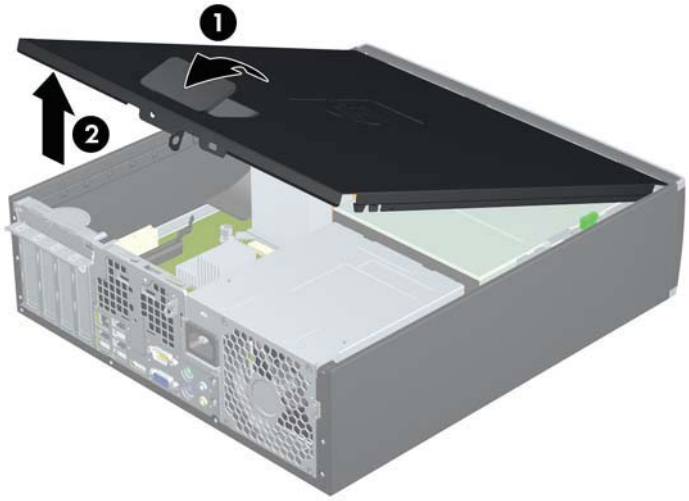

Replacing the Computer Access Panel

Slide the lip on the front end of the access panel under the lip on the front of the chassis (1) then press the back end of the access panel onto the unit so that it locks into place (2).

Figure 2-2 Replacing the Access Panel

Removing the Front Bezel

1. Remove/disengage any security devices that prohibit opening the computer.
2. Remove all removable media, such as compact discs or USB flash drives, from the computer.
3. Turn off the computer properly through the operating system, then turn off any external devices.
4. Disconnect the power cord from the power outlet and disconnect any external devices.

   △ **CAUTION:** Regardless of the power-on state, voltage is always present on the system board as long as the system is plugged into an active AC outlet. You must disconnect the power cord to avoid damage to the internal components of the computer.

5. Remove the access panel.
6. Lift up the three tabs on the side of the bezel (1), then rotate the bezel off the chassis (2).

   Figure 2-3 Removing the Front Bezel

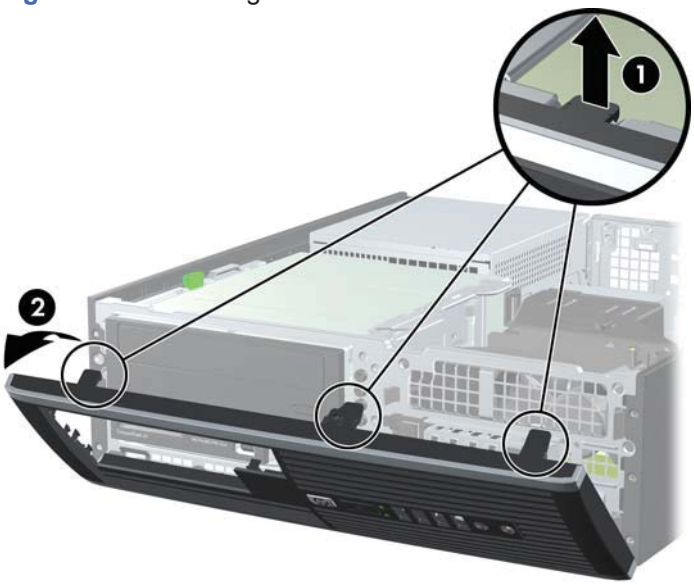

Removing Bezel Blanks

On some models, there are bezel blanks covering the 3.5-inch and 5.25-inch external drive bays that need to be removed before installing a drive. To remove a bezel blank:

1. Remove the access panel and front bezel.
2. To remove a bezel blank, push the two retaining tabs that hold the bezel blank in place towards the outer right edge of the bezel (1) and slide the bezel blank back and to the right to remove it (2).

Figure 2-4 Removing a Bezel Blank

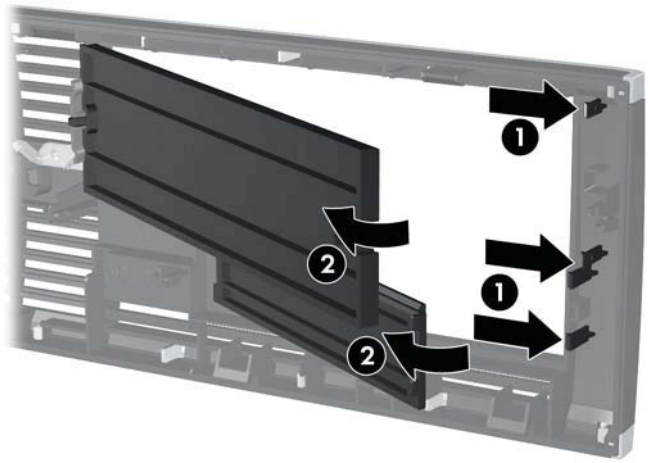

Replacing the Front Bezel

Insert the three hooks on the bottom side of the bezel into the rectangular holes on the chassis (1) then rotate the top side of the bezel onto the chassis (2) and snap it into place.

Figure 2-5 Replacing the Front Bezel

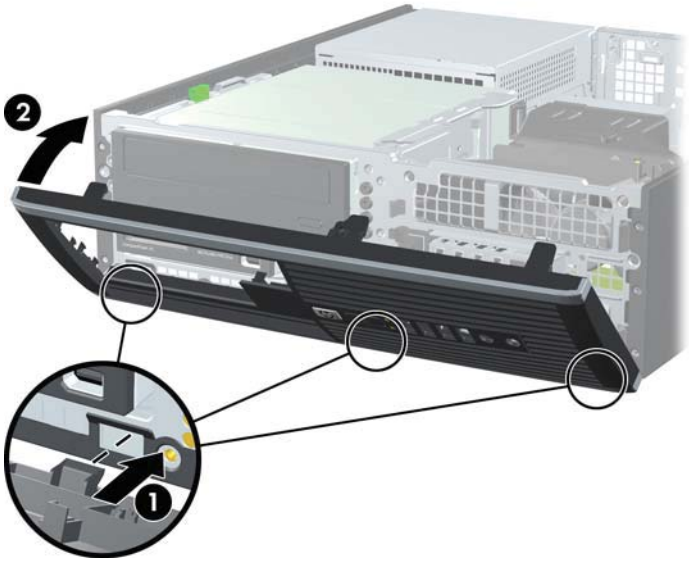

Using the Small Form Factor Computer in a Tower Orientation

The Small Form Factor computer can be used in a tower orientation with an optional tower stand that can be purchased from HP.

1. Remove/disengage any security devices that prohibit opening the computer.
2. Remove all removable media, such as compact discs or USB flash drives, from the computer.
3. Turn off the computer properly through the operating system, then turn off any external devices.
4. Disconnect the power cord from the power outlet and disconnect any external devices.

   △ **CAUTION:** Regardless of the power-on state, voltage is always present on the system board as long as the system is plugged into an active AC outlet. You must disconnect the power cord to avoid damage to the internal components of the computer.

5. Orient the computer so that its right side is facing down and place the computer in the optional stand.

   Figure 2-6 Changing from Desktop to Tower Orientation

   NOTE: To stabilize the computer in a tower orientation, HP recommends the use of the optional tower stand.

6. Reconnect the power cord and any external devices, then turn on the computer.

NOTE: Ensure at least 10.2 centimeters (4 inches) of space on all sides of the computer remains clear and free of obstructions.

Installing Additional Memory

The computer comes with double data rate 3 synchronous dynamic random access memory (DDR3-SDRAM) dual inline memory modules (DIMMs).

DIMMs

The memory sockets on the system board can be populated with up to four industry-standard DIMMs. These memory sockets are populated with at least one preinstalled DIMM. To achieve the maximum memory support, you can populate the system board with up to 16-GB of memory configured in a high-performing dual channel mode.

DDR3-SDRAM DIMMs

For proper system operation, the DDR3-SDRAM DIMMs must be:

- industry-standard 240-pin
- unbuffered non-ECC PC3-8500 DDR3-1066 MHz-compliant or PC3-10600 DDR3-1333 MHz-compliant

  NOTE: 1333 MHz DIMMS will only run at a speed of 1066 MHz.

- 1.5 volt DDR3-SDRAM DIMMs

The DDR3-SDRAM DIMMs must also:

- support CAS latency 7 DDR3 1066 MHz (7-7-7 timing) and CAS latency 9 DDR3 1333 MHz (9-9-9 timing)
- contain the mandatory JEDEC SPD information

In addition, the computer supports:

- 512-Mbit, 1-Gbit, and 2-Gbit non-ECC memory technologies
- single-sided and double-sided DIMMs
- DIMMs constructed with x8 and x16 DDR devices; DIMMs constructed with x4 SDRAM are not supported

NOTE: The system will not operate properly if you install unsupported DIMMs.

Populating DIMM Sockets

There are four DIMM sockets on the system board, with two sockets per channel. The sockets are labeled DIMM1, DIMM2, DIMM3, and DIMM4. Sockets DIMM1 and DIMM2 operate in memory channel A. Sockets DIMM3 and DIMM4 operate in memory channel B.

Figure 2-7 DIMM Socket Locations

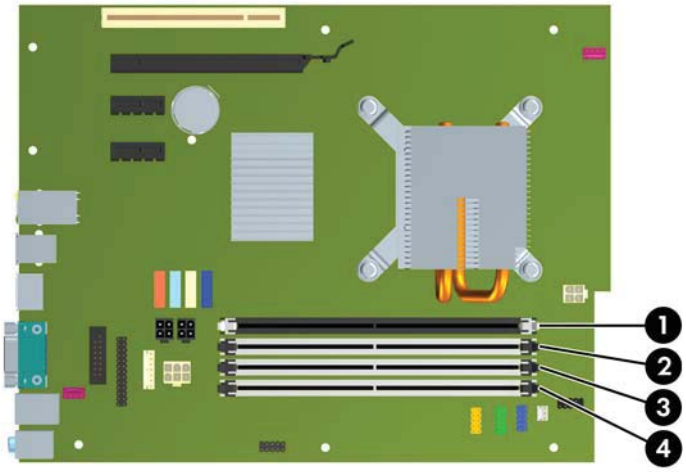

Table 2-1 DIMM Socket Locations

Item	Description	Socket Color
1	DIMM1 socket, Channel A (populate first)	Black
2	DIMM2 socket, Channel A (populate third)	White
3	DIMM3 socket, Channel B (populate second)	White
4	DIMM4 socket, Channel B (populate fourth)	White

NOTE: A DIMM must occupy the black DIMM1 socket. Otherwise, the system will display a POST error message indicating that a memory module must be installed in the wrong socket.

The system will automatically operate in single channel mode, dual channel mode, or flex mode, depending on how the DIMMs are installed.

- The system will operate in single channel mode if the DIMM sockets are populated in one channel only.
- The system will operate in a higher-performing dual channel mode if the total memory capacity of the DIMMs in Channel A is equal to the total memory capacity of the DIMMs in Channel B. The technology and device width can vary between the channels. For example, if Channel A is populated with two 512-MB DIMMs and Channel B is populated with one 1-GB DIMM, the system will operate in dual channel mode.
- The system will operate in flex mode if the total memory capacity of the DIMMs in Channel A is not equal to the total memory capacity of the DIMMs in Channel B. In flex mode, the channel populated with the least amount of memory describes the total amount of memory assigned to dual channel and the remainder is assigned to single channel. For optimal speed, the channels should be balanced so that the largest amount of memory is spread between the two channels. If one channel

will have more memory than the other, the larger amount should be assigned to Channel A. For example, if you are populating the sockets with one 1-GB DIMM, and three 512-MB DIMMs, Channel A should be populated with the 1-GB DIMM and one 512-MB DIMM, and Channel B should be populated with the two 512-MB DIMMs. With this configuration, 2-GB will run as dual channel and 512-MB will run as single channel.

- In any mode, the maximum operational speed is determined by the slowest DIMM in the system.

Installing DIMMs

△ **CAUTION:** You must disconnect the power cord and wait approximately 30 seconds for the power to drain before adding or removing memory modules. Regardless of the power-on state, voltage is always supplied to the memory modules as long as the computer is plugged into an active AC outlet. Adding or removing memory modules while voltage is present may cause irreparable damage to the memory modules or system board. If you see an LED light on the system board, voltage is still present.

The memory module sockets have gold-plated metal contacts. When upgrading the memory, it is important to use memory modules with gold-plated metal contacts to prevent corrosion and/or oxidation resulting from having incompatible metals in contact with each other.

Static electricity can damage the electronic components of the computer or optional cards. Before beginning these procedures, ensure that you are discharged of static electricity by briefly touching a grounded metal object. For more information, refer to Appendix D, Electrostatic Discharge on page 57.

When handling a memory module, be careful not to touch any of the contacts. Doing so may damage the module.

1. Remove/disengage any security devices that prohibit opening the computer.
2. Remove all removable media, such as compact discs or USB flash drives, from the computer.
3. Turn off the computer properly through the operating system, then turn off any external devices.
4. Disconnect the power cord from the power outlet and disconnect any external devices.

   △ **CAUTION:** You must disconnect the power cord and wait approximately 30 seconds for the power to drain before adding or removing memory modules. Regardless of the power-on state, voltage is always supplied to the memory modules as long as the computer is plugged into an active AC outlet. Adding or removing memory modules while voltage is present may cause irreparable damage to the memory modules or system board. If you see an LED light on the system board, voltage is still present.

5. If the computer is on a stand, remove the computer from the stand.
6. Remove the access panel.

   ⚠ **WARNING!** To reduce risk of personal injury from hot surfaces, allow the internal system components to cool before touching.

7. Rotate up the external drive bay housing to access the memory module sockets on the system board.

Figure 2-8 Rotating the Drive Cage Up

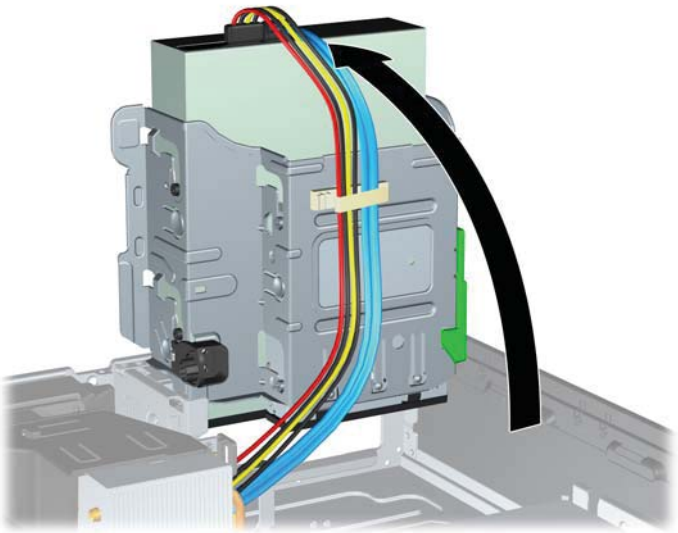

8. Open both latches of the memory module socket (1), and insert the memory module into the socket (2).

Figure 2-9 Installing a DIMM

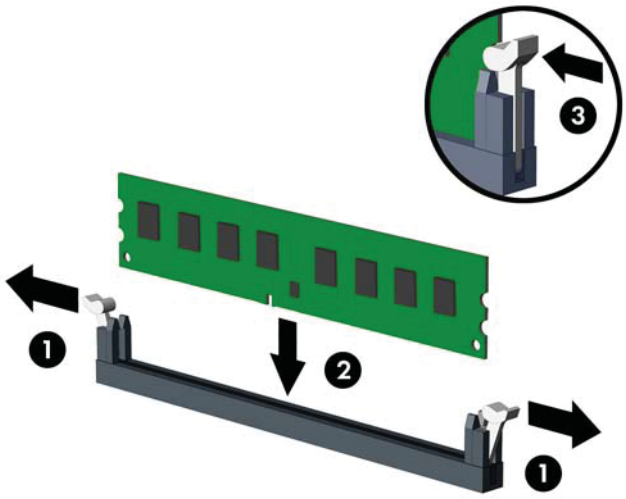

NOTE: A memory module can be installed in only one way. Match the notch on the module with the tab on the memory socket.

A DIMM must occupy the black DIMM1 socket.

Populate the DIMM sockets in the following order: DIMM1, DIMM3, DIMM2, then DIMM4.

For maximum performance, populate the sockets so that the memory capacity is spread as equally as possible between Channel A and Channel B. Refer to Populating DIMM Sockets on page 16 for more information.

9. Push the module down into the socket, ensuring that the module is fully inserted and properly seated. Make sure the latches are in the closed position (3).
10. Repeat steps 8 and 9 to install any additional modules.
11. Replace the access panel.
12. If the computer was on a stand, replace the stand.
13. Reconnect the power cord and turn on the computer.
14. Lock any security devices that were disengaged when the access panel was removed.

The computer should automatically recognize the additional memory the next time you turn on the computer.

Removing or Installing an Expansion Card

The computer has one PCI expansion slot, two PCI Express x1 expansion slots, and one PCI Express x16 expansion slot.

NOTE: The PCI and PCI Express slots support only low profile cards.

Figure 2-10 Expansion Slot Locations

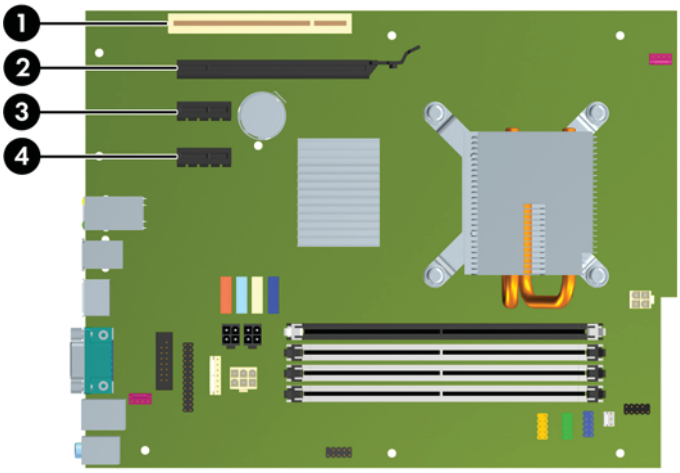

Table 2-2 Expansion Slot Locations

Item	Description
1	PCI expansion slot
2	PCI Express x16 expansion slot
3	PCI Express x1 expansion slot
4	PCI Express x1 expansion slot

NOTE: You can install a PCI Express x1, x4, x8, or x16 expansion card in the PCI Express x16 slot.

To install an expansion card:

1. Remove/disengage any security devices that prohibit opening the computer.
2. Remove all removable media, such as compact discs or USB flash drives, from the computer.
3. Turn off the computer properly through the operating system, then turn off any external devices.
4. Disconnect the power cord from the power outlet and disconnect any external devices.

   CAUTION: Regardless of the power-on state, voltage is always present on the system board as long as the system is plugged into an active AC outlet. You must disconnect the power cord to avoid damage to the internal components of the computer.

5. If the computer is on a stand, remove the computer from the stand.
6. Remove the access panel.

7. Locate the correct vacant expansion socket on the system board and the corresponding expansion slot on the back of the computer chassis.

8. Release the slot cover retention latch that secures the PCI slot covers by lifting the green tab on the latch and rotating the latch to the open position.

Figure 2-11 Opening the Expansion Slot Retainer

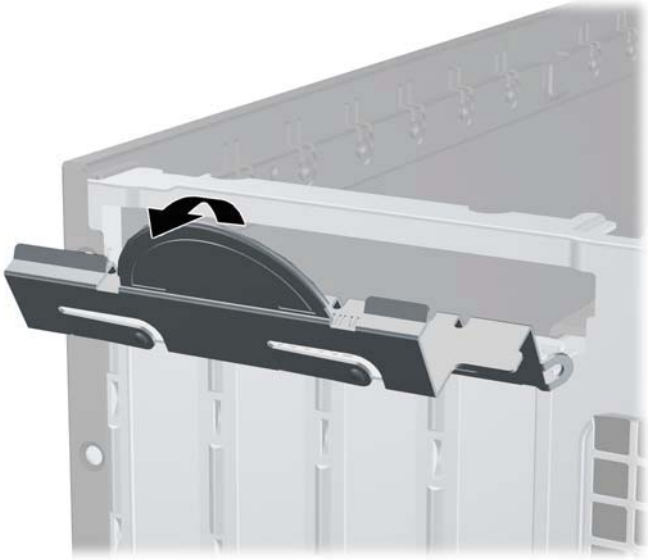

9. Before installing an expansion card, remove the expansion slot cover or the existing expansion card.

   a. If you are installing an expansion card in a vacant socket, remove the appropriate expansion slot cover on the back of the chassis. Pull the slot cover straight up then away from the inside of the chassis.

   Figure 2-12 Removing an Expansion Slot Cover

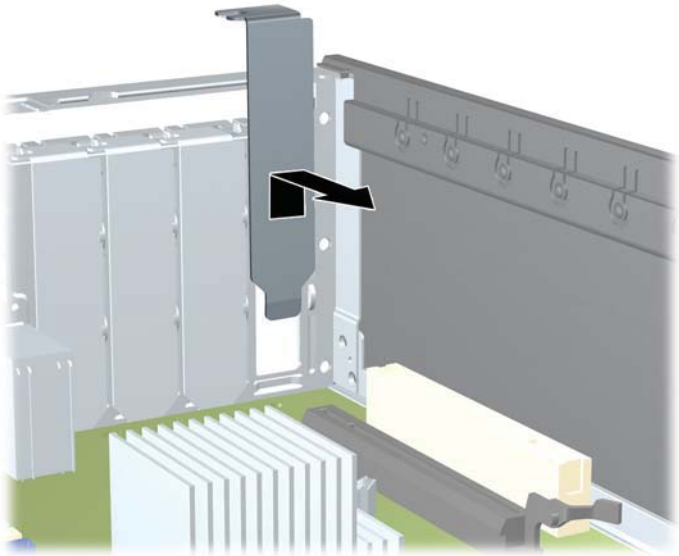

b. If you are removing a standard PCI card or PCI Express x1 card, hold the card at each end, and carefully rock it back and forth until the connectors pull free from the socket. Pull the expansion card straight up from the socket then away from the inside of the chassis to release it from the chassis frame. Be sure not to scrape the card against the other components.

NOTE: Before removing an installed expansion card, disconnect any cables that may be attached to the expansion card.

Figure 2-13 Removing a Standard PCI Expansion Card

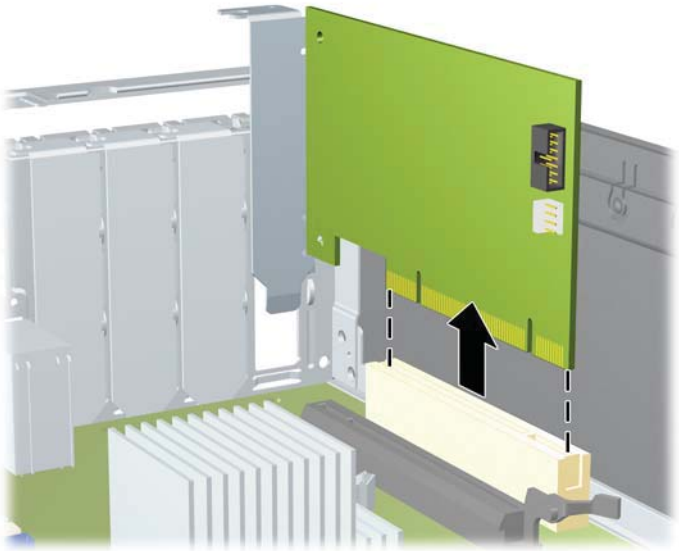

c. If you are removing a PCI Express x16 card, pull the retention arm on the back of the expansion socket away from the card and carefully rock the card back and forth until the connectors pull free from the socket. Pull the expansion card straight up from the socket then away from the inside of the chassis to release it from the chassis frame. Be sure not to scrape the card against the other components.

Figure 2-14 Removing a PCI Express x16 Expansion Card

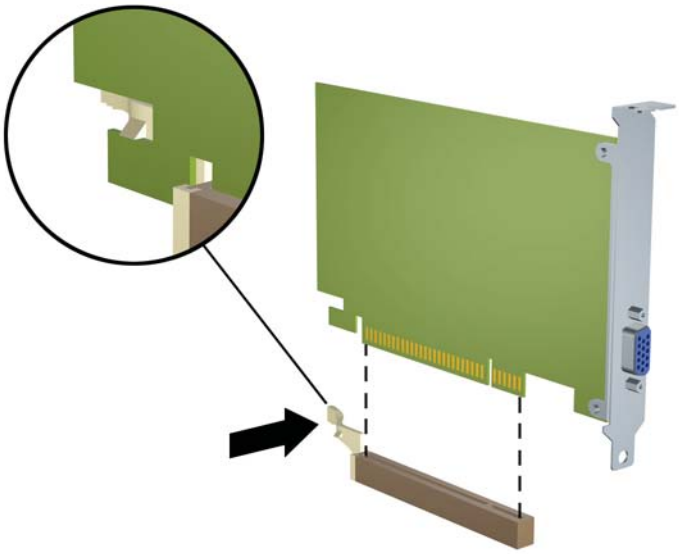

10. Store the removed card in anti-static packaging.

11. If you are not installing a new expansion card, install an expansion slot cover to close the open slot.

△ **CAUTION:** After removing an expansion card, you must replace it with a new card or expansion slot cover for proper cooling of internal components during operation.

12. To install a new expansion card, hold the card just above the expansion socket on the system board then move the card toward the rear of the chassis so that the bracket on the card is aligned with the open slot on the rear of the chassis. Press the card straight down into the expansion socket on the system board.

Figure 2-15 Installing an Expansion Card

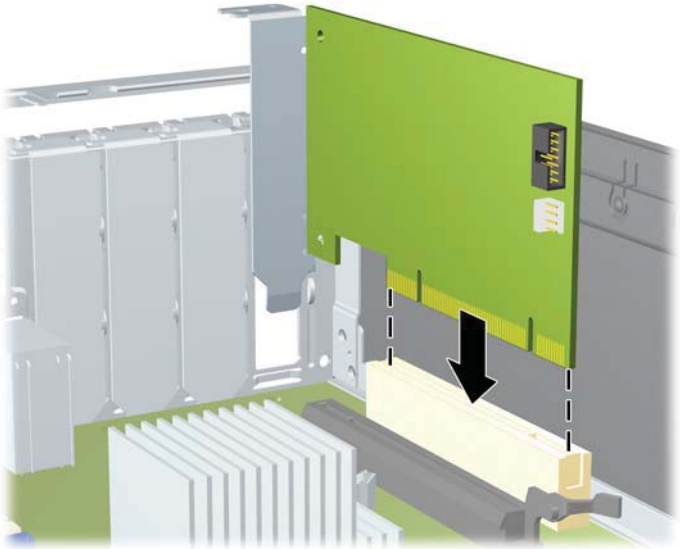

NOTE: When installing an expansion card, press firmly on the card so that the whole connector seats properly in the expansion card slot.

13. Rotate the slot cover retention latch back in place to secure the expansion card.

Figure 2-16 Closing the Expansion Slot Retainer

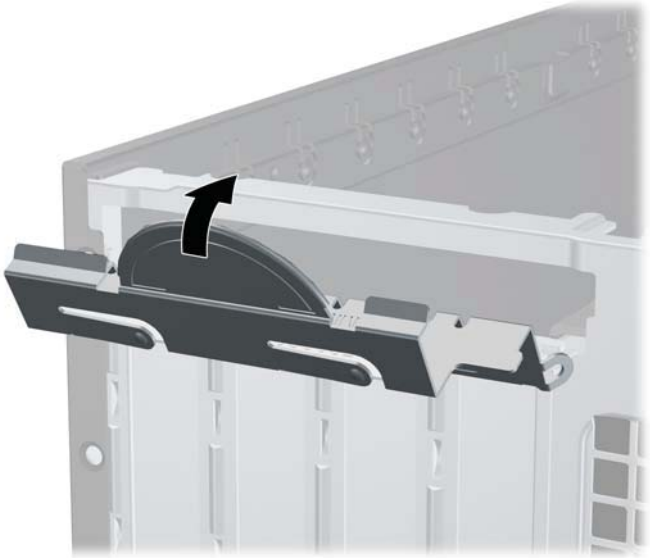

14. Connect external cables to the installed card, if needed. Connect internal cables to the system board, if needed.

15. Replace the access panel.

16. If the computer was on a stand, replace the stand.
17. Reconnect the power cord and turn on the computer.
18. Lock any security devices that were disengaged when the access panel was removed.
19. Reconfigure the computer, if necessary. Refer to the *Computer Setup (F10) Utility Guide* for instructions on using Computer Setup.

Drive Positions

Figure 2-17 Drive Positions

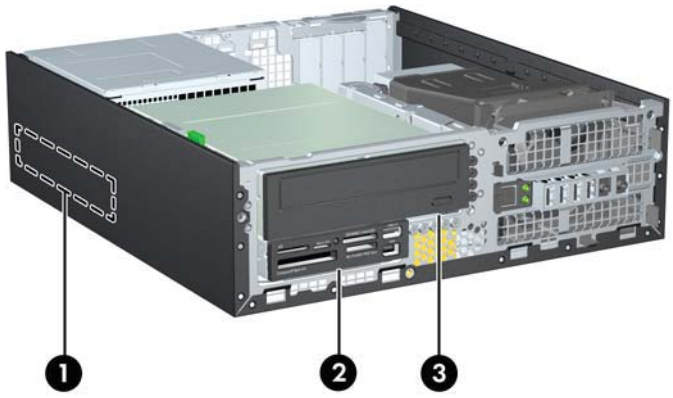

Table 2-3 Drive Positions

1	3.5-inch internal hard drive bay
2	3.5-inch external drive bay for optional drives (media card reader shown)
3	5.25-inch external drive bay for optional drives (optical drive shown)
NOTE: The drive configuration on your computer may be different than the drive configuration shown above.	

To verify the type, size, and capacity of the storage devices installed in the computer, run Computer Setup. Refer to the *Computer Setup (F10) Utility Guide* for more information.

Installing and Removing Drives

When installing additional drives, follow these guidelines:

- The primary Serial ATA (SATA) hard drive must be connected to the dark blue primary SATA connector on the system board labeled SATA0.
- Connect a SATA optical drive to the white SATA connector on the system board labeled SATA1.
- Connect devices in order of SATA0, SATA1, SATA2, then SATA3
- Connect an eSATA adapter cable to the orange SATA3 connector.

NOTE: The eSATA adapter installs into one of the expansion slots on the rear of the computer. You must configure the SATA3 connector to function as eSATA in the Computer Setup utility. Select **Storage** > **Storage Options** > **eSATA Port** to reconfigure the SATA3 connector. Refer to the *Computer Setup (F10) Utility Guide* for more information.

- Connect a media card reader USB cable to the USB connector on the system board labeled MEDIA. If the media card reader has a 1394 port, connect the 1394 cable to the 1394 PCI card.
- The system does not support Parallel ATA (PATA) optical drives or PATA hard drives.
- You must install guide screws to ensure the drive will line up correctly in the drive cage and lock in place. HP has provided extra guide screws for the external drive bays (five 6-32 standard screws and four M3 metric screws), installed in the front of the chassis, under the front bezel. The 6-32 standard screws are required for a secondary hard drive. All other drives (except the primary hard drive) use M3 metric screws. The HP-supplied metric screws are black and the HP-supplied standard screws are silver. If you are replacing the primary hard drive, you must remove the four silver and blue 6-32 isolation mounting guide screws from the old hard drive and install them in the new hard drive.

Figure 2-18 Extra Guide Screw Locations

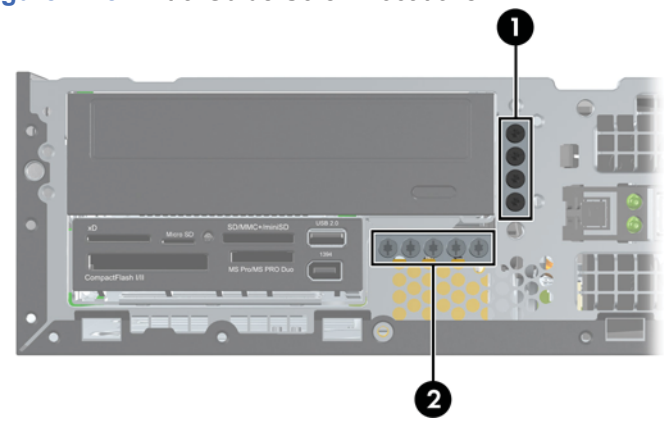

No.	Guide Screw	Device
1	Black M3 Metric Screws	All Other Drives (except primary hard drive)
2	Silver 6-32 Standard Screws	Secondary Hard Drive

There are at total of five extra silver 6-32 standard screws. Four are used as guide screws for a secondary hard drive. The fifth is used for bezel security (see Front Bezel Security on page 55 for more information).

△ **CAUTION:** To prevent loss of work and damage to the computer or drive:

If you are inserting or removing a drive, shut down the operating system properly, turn off the computer, and unplug the power cord. Do not remove a drive while the computer is on or in standby mode.

Before handling a drive, ensure that you are discharged of static electricity. While handling a drive, avoid touching the connector. For more information about preventing electrostatic damage, refer to Appendix D, Electrostatic Discharge on page 57.

Handle a drive carefully; do not drop it.

Do not use excessive force when inserting a drive.

Avoid exposing a hard drive to liquids, temperature extremes, or products that have magnetic fields such as monitors or speakers.

If a drive must be mailed, place the drive in a bubble-pack mailer or other protective packaging and label the package “Fragile: Handle With Care.”

System Board Drive Connections

Refer to the following illustration and table to identify the system board drive connectors.

Figure 2-19 System Board Drive Connections

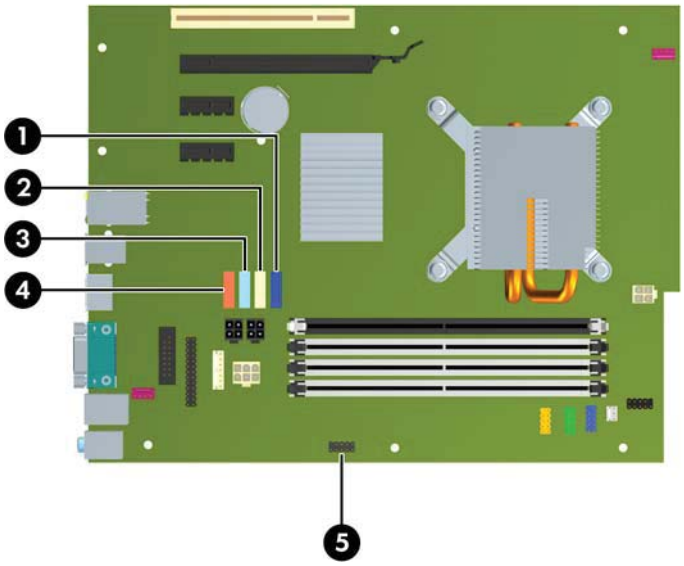

Table 2-4 System Board Drive Connections

No.	System Board Connector	System Board Label	Color
1	SATA0	SATA0	dark blue
2	SATA1	SATA1	white
3	SATA2	SATA2	light blue
4	SATA3	SATA3	orange
5	Media Card Reader	MEDIA	black

NOTE: The orange SATA3 connector can be reconfigured as eSATA in the Computer Setup utility if you are installing an eSATA adapter. Select **Storage** > **Storage Options** > **eSATA Port** to reconfigure the SATA3 connector. Refer to the *Computer Setup (F10) Utility Guide* for more information.

Removing an External 5.25-inch Drive

△ **CAUTION:** All removable media should be taken out of a drive before removing the drive from the computer.

To remove a 5.25-inch external drive:

1. Remove/disengage any security devices that prohibit opening the computer.
2. Remove all removable media, such as compact discs or USB flash drives, from the computer.
3. Turn off the computer properly through the operating system, then turn off any external devices.
4. Disconnect the power cord from the power outlet and disconnect any external devices.

   △ **CAUTION:** Regardless of the power-on state, voltage is always present on the system board as long as the system is plugged into an active AC outlet. You must disconnect the power cord to avoid damage to the internal components of the computer.

5. If the computer is on a stand, remove the computer from the stand.
6. Remove the access panel.
7. Rotate the drive cage to its upright position.

   Figure 2-20 Rotating the Drive Cage Up

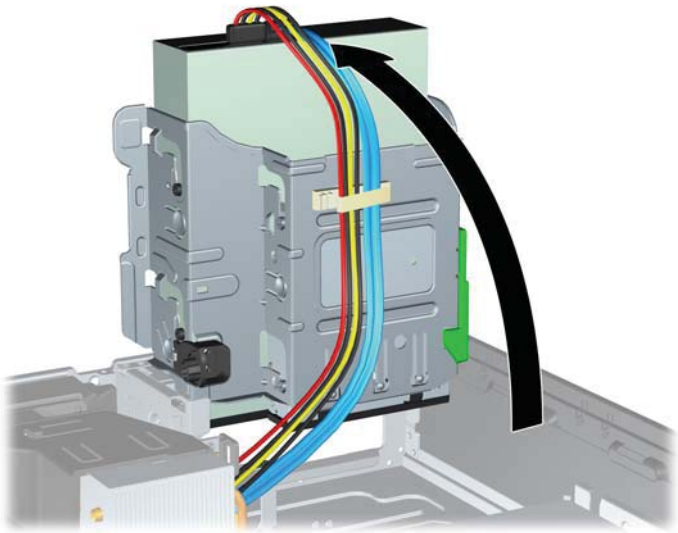

8. If removing an optical drive, disconnect the power cable (1) and data cable (2) from the rear of the optical drive.

Figure 2-21 Disconnecting the Power and Data Cables

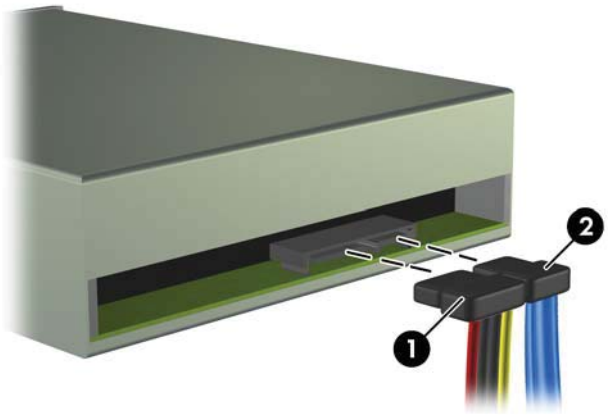

9. Rotate the drive cage back down to its normal position.

△ **CAUTION:** Be careful not to pinch any cables or wires when rotating the drive cage down.

Figure 2-22 Rotating the Drive Cage Down

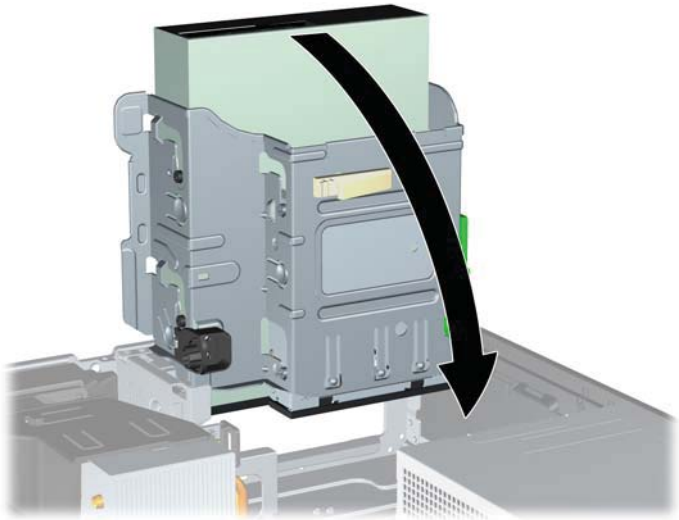

10. Press down on the green drive retainer button located on the left side of the drive to disengage the drive from the drive cage (1). While pressing the drive retainer button, slide the drive back until it stops, then lift it up and out of the drive cage (2).

Figure 2-23 Removing the 5.25-inch Drive

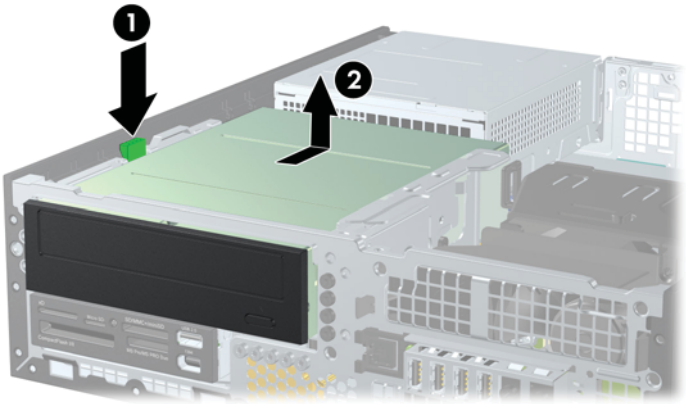

NOTE: To replace the drive, reverse the removal procedure. When replacing a drive, transfer the four guide screws from the old drive to the new one.

Installing an Optical Drive into the 5.25-inch Drive Bay

To install an optional 5.25-inch optical drive:

1. Remove/disengage any security devices that prohibit opening the computer.
2. Remove all removable media, such as compact discs or USB flash drives, from the computer.
3. Turn off the computer properly through the operating system, then turn off any external devices.
4. Disconnect the power cord from the power outlet and disconnect any external devices.

   CAUTION: Regardless of the power-on state, voltage is always present on the system board as long as the system is plugged into an active AC outlet. You must disconnect the power cord to avoid damage to the internal components of the computer.

5. If the computer is on a stand, remove the computer from the stand.
6. Remove the access panel.
7. If you are installing a drive in a bay covered by a bezel blank, remove the front bezel then remove the bezel blank. See Removing Bezel Blanks on page 12 for more information.

8. Install four M3 metric guide screws in the lower holes on each side of the drive. HP has provided four extra M3 metric guide screws on the front of the chassis, under the front bezel. The M3 metric guide screws are black. Refer to Installing and Removing Drives on page 27 for an illustration of the extra M3 metric guide screws location.

△ **CAUTION:** Use only 5-mm long screws as guide screws. Longer screws can damage the internal components of the drive.

NOTE: When replacing the drive, transfer the four M3 metric guide screws from the old drive to the new one.

Figure 2-24 Installing Guide Screws in the Optical Drive

9. Position the guide screws on the drive into the J-slots in the drive bay. Then slide the drive toward the front of the computer until it locks into place.

Figure 2-25 Installing the Optical Drive

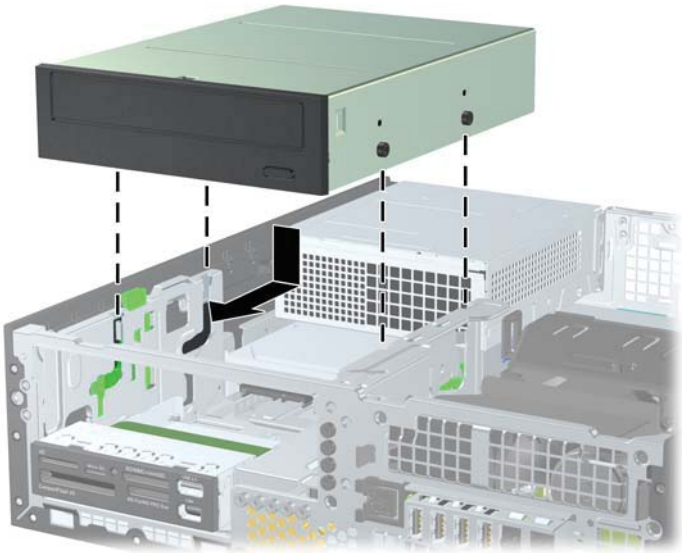

10. Rotate the drive cage to its upright position.

Figure 2-26 Rotating the Drive Cage Up

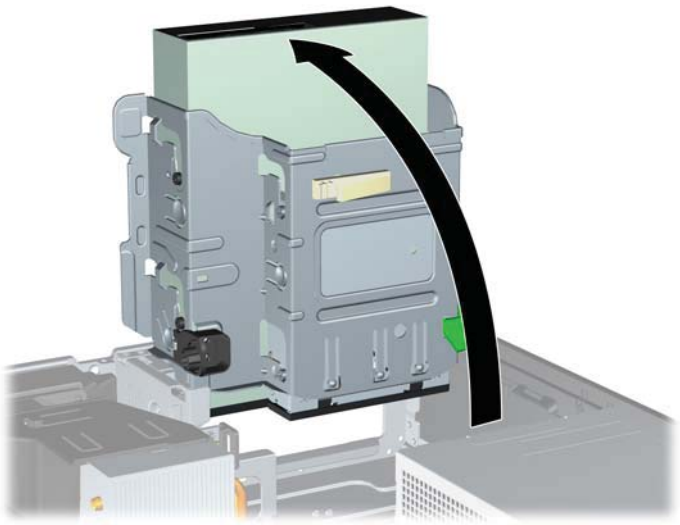

11. Connect the SATA data cable to the white system board connector labeled SATA1.

12. Route the data cable through the cable guides.

△ **CAUTION:** There are two cable guides that keep the data cable from being pinched by the drive cage when raising or lowering it. One is located on the bottom side of the drive cage. The other is located on the chassis frame under the drive cage. Ensure that the data cable is routed through these guides before connecting it to the optical drive.

13. Connect the power cable (1) and data cable (2) to the rear of the optical drive.

Figure 2-27 Connecting the Power and Data Cables

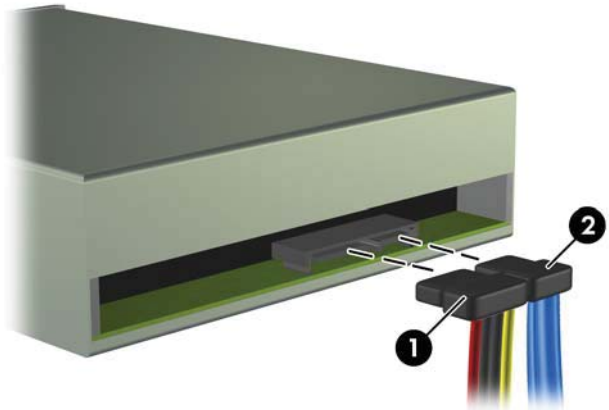

14. Rotate the drive cage back down to its normal position.

△ **CAUTION:** Be careful not to pinch any cables or wires when rotating the drive cage down.

Figure 2-28 Rotating the Drive Cage Down

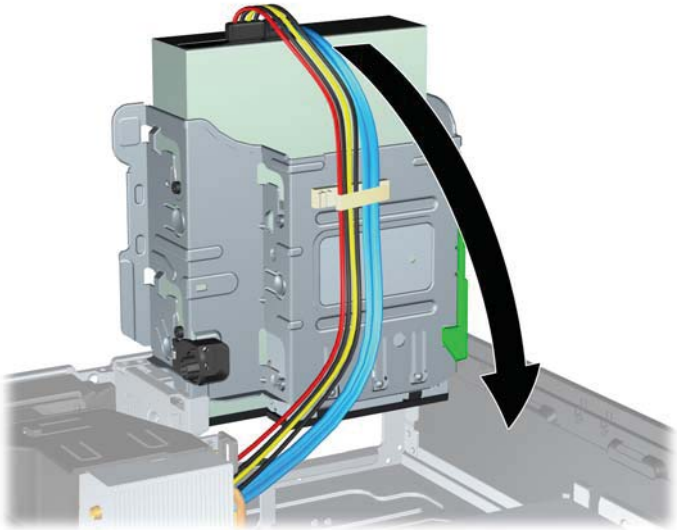

15. Replace the access panel.
16. If the computer was on a stand, replace the stand.
17. Reconnect the power cord and turn on the computer.
18. Lock any security devices that were disengaged when the access panel was removed.

The system automatically recognizes the drive and reconfigures the computer.

Removing an External 3.5-inch Drive

△ **CAUTION:** All removable media should be taken out of a drive before removing the drive from the computer.

The 3.5-inch drive is located underneath the 5.25-inch drive. You must remove the external 5.25-inch drive before removing the external 3.5-inch drive.

1. Follow the procedure in Removing an External 5.25-inch Drive on page 30 to remove the 5.25-inch drive and access the 3.5-inch drive.

   △ **CAUTION:** Ensure that the computer is turned off and that the power cord is disconnected from the electrical outlet before proceeding.

2. Disconnect the drive cables from the rear of the drive, or, if you are removing a media card reader, disconnect the USB and 1394 cables from the system board as indicated in the following illustrations.

NOTE: On some models, the media card reader does not include a 1394 port or cable.

Figure 2-29 Disconnecting the Media Card Reader USB Cable

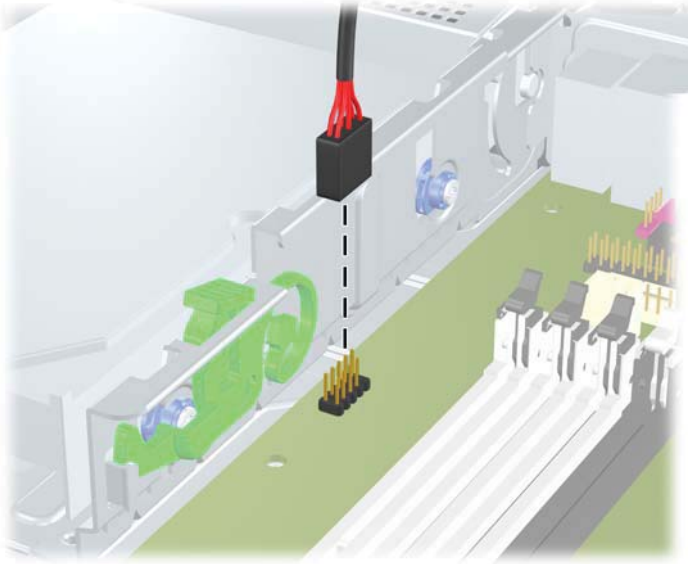

Figure 2-30 Disconnecting the Media Card Reader 1394 Cable

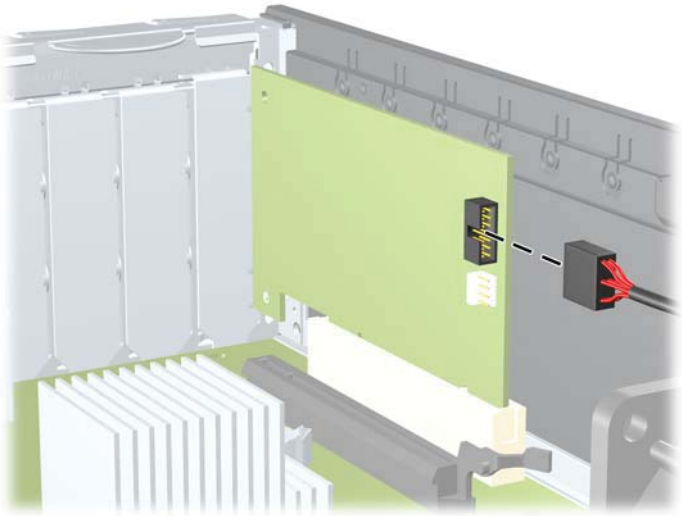

3. Press down on the green drive retainer button located on the left side of the drive to disengage the drive from the drive cage (1). While pressing the drive retainer button, slide the drive back until it stops, then lift it up and out of the drive cage (2).

Figure 2-31 Removing a 3.5-inch Drive (Media Card Reader Shown)

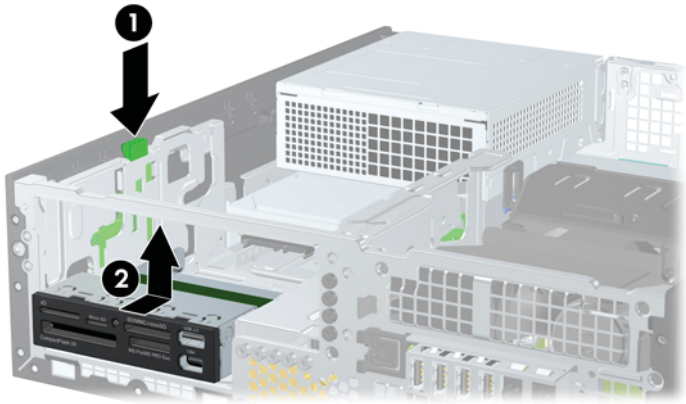

NOTE: To replace the 3.5-inch drive, reverse the removal procedure.

When replacing a 3.5-inch drive, transfer the four guide screws from the old drive to the new one.

Installing a Drive into the 3.5-inch External Drive Bay

The 3.5-inch bay is located underneath the 5.25-inch drive. To install a drive into the 3.5-inch bay:

NOTE: Install guide screws to ensure the drive will line up correctly in the drive cage and lock in place. HP has provided extra guide screws for the external drive bays (four 6-32 standard screws and four M3 metric screws), installed in the front of the chassis, under the front bezel. A secondary hard drive uses 6-32 standard screws. All other drives (except the primary hard drive) use M3 metric screws. The HP-supplied M3 metric screws are black and the HP-supplied 6-32 standard screws are silver. Refer to Installing and Removing Drives on page 27 for illustrations of the guide screw locations.

1. Follow the procedure in Removing an External 5.25-inch Drive on page 30 to remove the 5.25-inch drive and access the 3.5-inch drive bay.

   CAUTION: Ensure that the computer is turned off and that the power cord is disconnected from the electrical outlet before proceeding.

2. If you are installing a drive in a bay covered by a bezel blank, remove the front bezel then remove the bezel blank. See Removing Bezel Blanks on page 12 for more information.

3. Position the guide screws on the drive into the J-slots in the drive bay. Then slide the drive toward the front of the computer until it locks into place.

Figure 2-32 Installing a Drive into the 3.5-inch Drive Bay (Media Card Reader Shown)

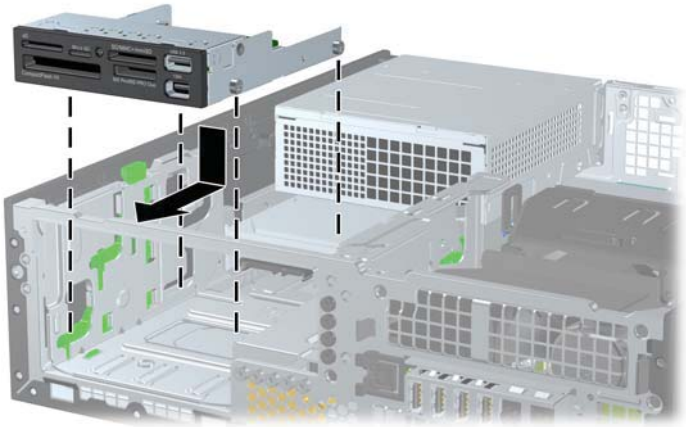

4. Connect the appropriate drive cables:

   a. If installing a second hard drive, connect the power and data cables to the rear of the drive and connect the other end of the data cable to the next available (unpopulated) SATA connector on the system board by following the numbered sequence of the connectors.

   b. If installing a media card reader, connect the USB cable from the media card reader to the USB connector on the system board labeled MEDIA. If the media card reader includes a 1394 port, connect the 1394 cable to the 1394 PCI card.

   NOTE: Refer to System Board Drive Connections on page 29 for an illustration of the system board drive connectors.

5. Replace the 5.25-inch drive.
6. Replace the front bezel and access panel.
7. If the computer was on a stand, replace the stand.
8. Reconnect the power cord and turn on the computer.
9. Lock any security devices that were disengaged when the access panel was removed.

Removing and Replacing the Primary 3.5-inch Internal SATA Hard Drive

NOTE: The system does not support Parallel ATA (PATA) hard drives.

Before you remove the old hard drive, be sure to back up the data from the old hard drive so that you can transfer the data to the new hard drive.

The preinstalled 3.5-inch hard drive is located under the power supply. To remove and replace the hard drive:

1. Remove/disengage any security devices that prohibit opening the computer.
2. Remove all removable media, such as compact discs or USB flash drives, from the computer.
3. Turn off the computer properly through the operating system, then turn off any external devices.
4. Disconnect the power cord from the power outlet and disconnect any external devices.

   CAUTION: Regardless of the power-on state, voltage is always present on the system board as long as the system is plugged into an active AC outlet. You must disconnect the power cord to avoid damage to the internal components of the computer.

5. If the computer is on a stand, remove the computer from the stand.
6. Remove the access panel.
7. Rotate the drive cage for external drives to its upright position.

   Figure 2-33 Rotating the Drive Cage Up

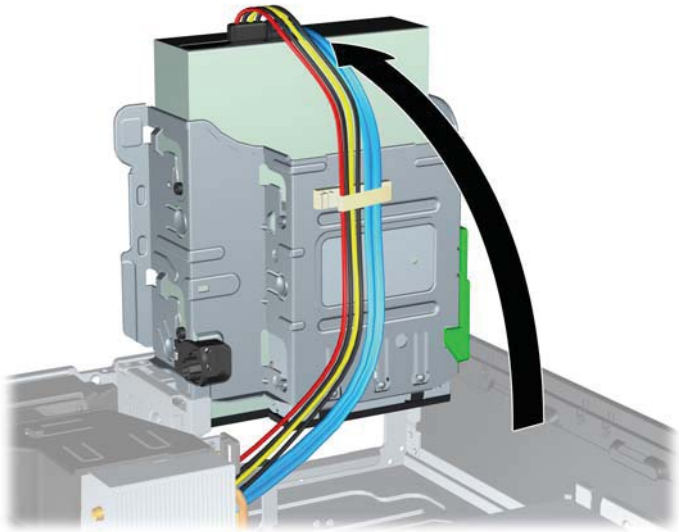

8. Rotate the power supply to its upright position. The hard drive is located beneath the power supply.

Figure 2-34 Raising the Power Supply

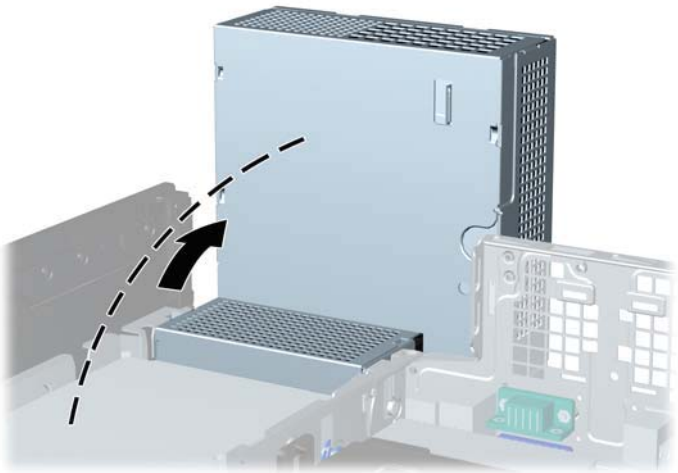

9. Disconnect the power cable (1) and data cable (2) from the back of the hard drive.

Figure 2-35 Disconnecting the Hard Drive Power Cable and Data Cable

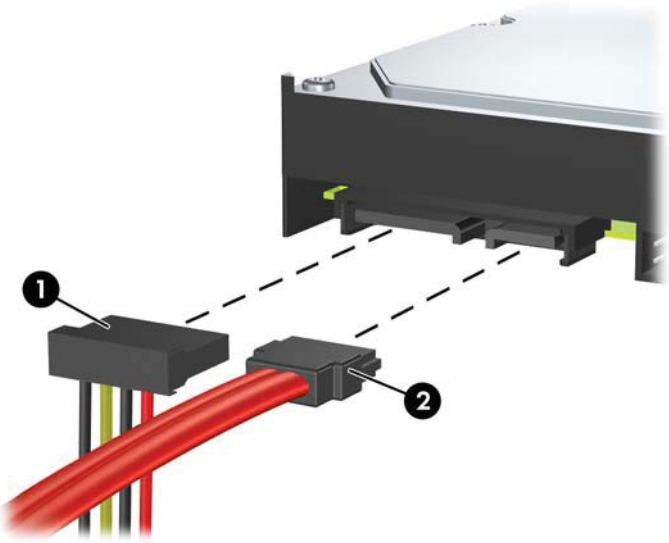

10. Press down on the green release latch next to the hard drive (1). While holding the latch down, slide the drive forward until it stops, then lift the drive up and out of the bay (2).

Figure 2-36 Removing the Hard Drive

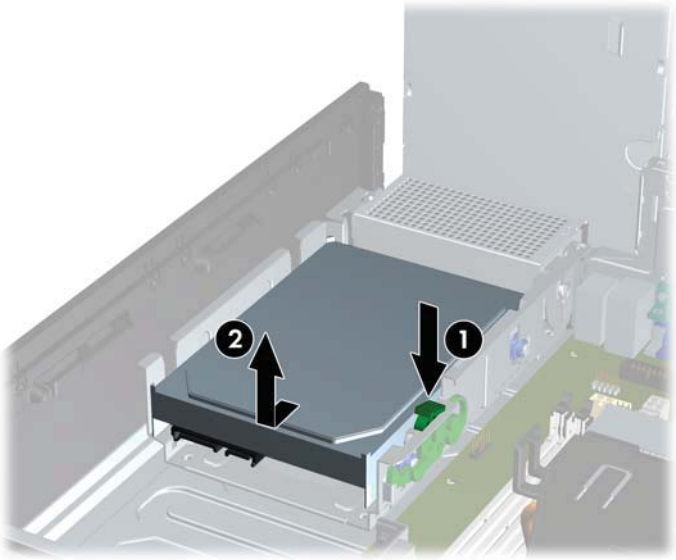

11. To install a hard drive, you must transfer the silver and blue isolation mounting guide screws from the old hard drive to the new hard drive.

Figure 2-37 Installing Hard Drive Guide Screws

12. Align the guide screws with the slots on the chassis drive cage, press the hard drive down into the bay, then slide it back until it stops and locks in place.

Figure 2-38 Installing the Hard Drive

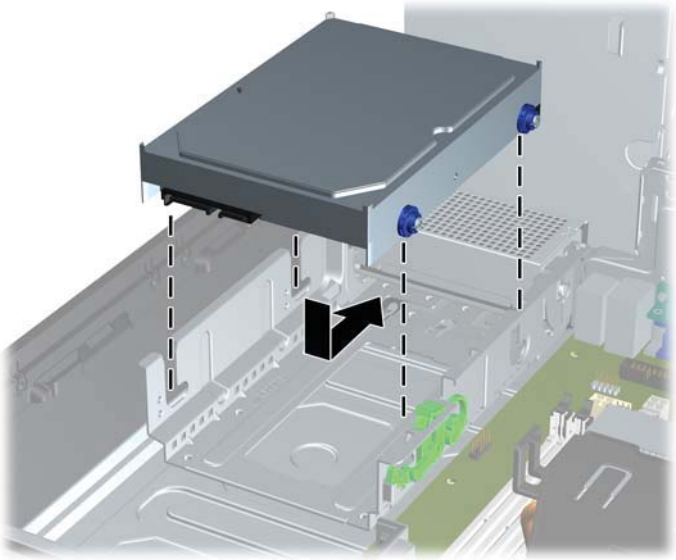

13. Connect the power and data cables to the back of the hard drive.

NOTE: When replacing the primary hard drive, be sure to route the SATA and power cables through the cable guide on the bottom of the chassis frame behind the hard drive.

If the system has only one SATA hard drive, the data cable must be connected to the dark blue connector labeled SATA0 on the system board to avoid any hard drive performance problems. If you are adding a second hard drive, connect the other end of the data cable to the next available (unpopulated) SATA connector on the system board in the following order: SATA0, SATA1, SATA2, SATA3.

14. Rotate the drive cage for external drives and the power supply down to their normal positions.

15. Replace the access panel.

16. If the computer was on a stand, replace the stand.

17. Reconnect the power cord and turn on the computer.

18. Lock any security devices that were disengaged when the access panel was removed.

Removing and Replacing a Removable 3.5-inch SATA Hard Drive

Some models are equipped with a Removable SATA Hard Drive Enclosure in the 5.25-inch external drive bay. The hard drive is housed in a carrier that can be quickly and easily removed from the drive bay. To remove and replace a drive in the carrier:

NOTE: Before you remove the old hard drive, be sure to back up the data from the old hard drive so that you can transfer the data to the new hard drive.

1. Unlock the hard drive carrier with the key provided and slide the carrier out of the enclosure.
2. Remove the screw from the rear of the carrier (1) and slide the top cover off the carrier (2).

   Figure 2-39 Removing the Carrier Cover

3. Remove the adhesive strip that secures the thermal sensor to the top of the hard drive (1) and move the thermal sensor away from the carrier (2).

   Figure 2-40 Removing the Thermal Sensor

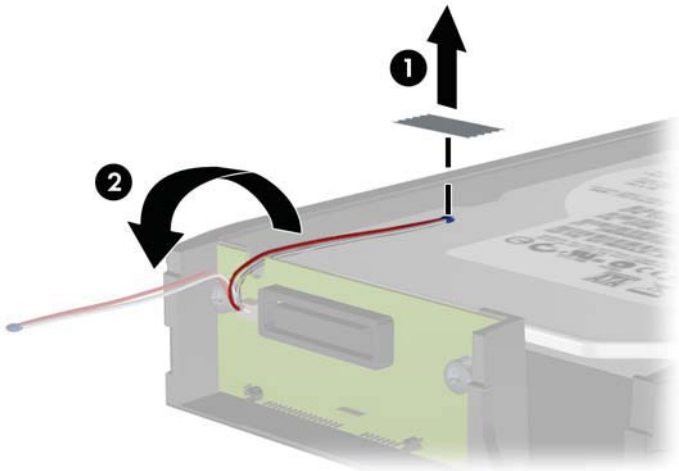

4. Remove the four screws from the bottom of the hard drive carrier.

Figure 2-41 Removing the Security Screws

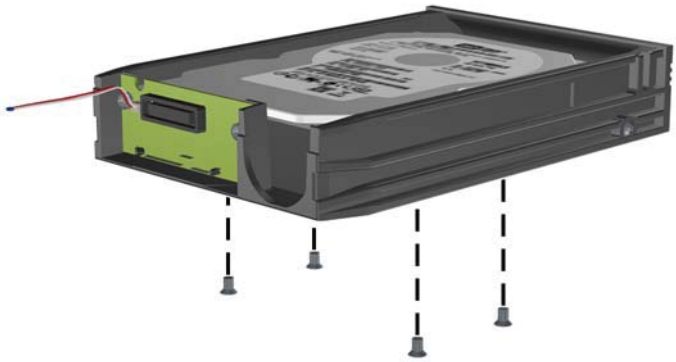

5. Slide the hard drive back to disconnect it from the carrier then lift it up and out of the carrier.

Figure 2-42 Removing the Hard Drive

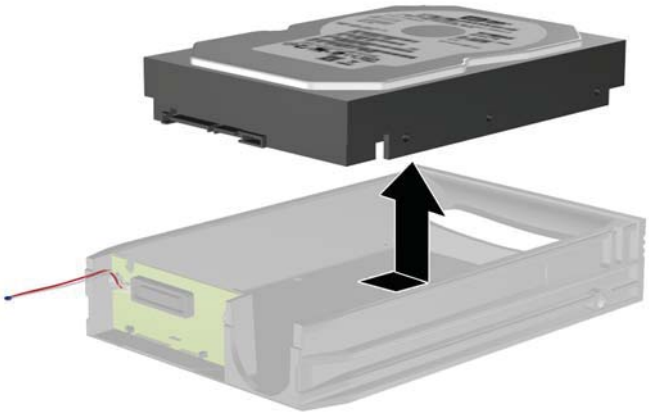

6. Place the new hard drive in the carrier then slide the hard drive back so that it seats in the SATA connector on the carrier's circuit board. Be sure the connector on the hard drive is pressed all the way into the connector on the carrier's circuit board.

Figure 2-43 Replacing the Hard Drive

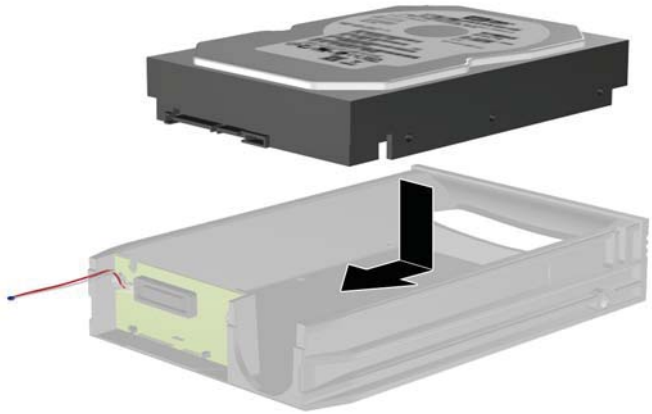

7. Replace the four screws in the bottom of the carrier to hold the drive securely in place.

Figure 2-44 Replacing the Security Screws

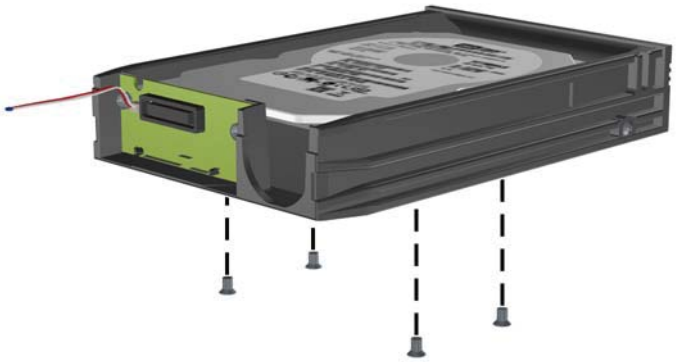

8. Place the thermal sensor on top of the hard drive in a position that does not cover the label (1) and attach the thermal sensor to the top of the hard drive with the adhesive strip (2).

Figure 2-45 Replacing the Thermal Sensor

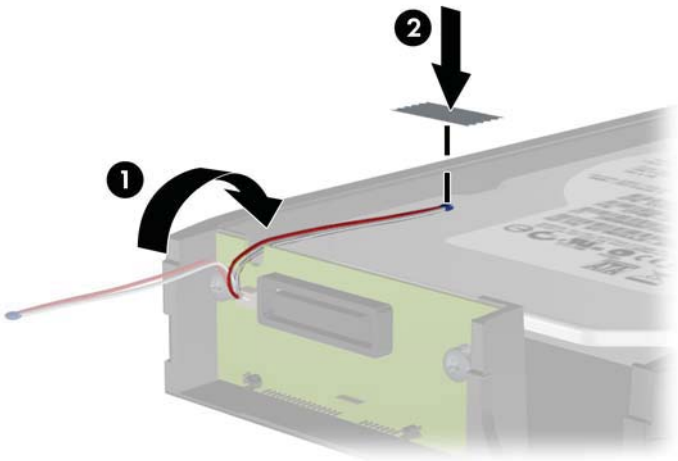

9. Slide the cover on the carrier (1) and replace the screw on the rear of the carrier to secure the cover in place (2).

Figure 2-46 Replacing the Carrier Cover

10. Slide the hard drive carrier into the enclosure on the computer and lock it with the key provided.

NOTE: The carrier must be locked for power to be supplied to the hard drive.

A Specifications

Table A-1 Specifications

Desktop Dimensions (in the desktop position)		
Height	3.95 in	10.0 cm
Width	13.3 in	33.8 cm
Depth	14.9 in	37.8 cm
Approximate Weight	19 lb	8.6 kg
Weight Supported (maximum distributed load in desktop position)	77 lb	35 kg
Temperature Range		
Operating	50° to 95°F	10° to 35°C
Nonoperating	-22° to 140°F	-30° to 60°C
NOTE: Operating temperature is derated 1.0° C per 300 m (1000 ft) to 3000 m (10,000 ft) above sea level; no direct sustained sunlight. Maximum rate of change is 10° C/Hr. The upper limit may be limited by the type and number of options installed.		
Relative Humidity (noncondensing)		
Operating	10-90%	10-90%
Nonoperating (38.7°C max wet bulb)	5-95%	5-95%
Maximum Altitude (unpressurized)		
Operating	10,000 ft	3048 m
Nonoperating	30,000 ft	9144 m
Heat Dissipation		
Max STD PS	1063 BTU/hr	268 kg-cal/hr
Typical STD PS idle	147 BTU/hr	37 kg-cal/hr
Max EPA 87/89/85% @ 20/50/100% load PS	941 BTU/hr	237 kg-cal/hr
Typical EPA 87/89/85% @ 20/50/100% load PS idle	95 BTU/hr	24 kg-cal/hr
Power Supply	**115V**	**230V**
Operating Voltage Range (STD PS)	90-264 VAC	90-264 VAC
Operating Voltage Range (EPA 87/89/85% @ 20/50/100% load PS)	90-264 VAC	90-264 VAC
Rated Voltage Range (STD PS)	100-240 VAC	100-240 VAC
Rated Voltage Range (EPA 87/89/85% @ 20/50/100% load PS)	100-240 VAC	100-240 VAC

Table A-1 Specifications (continued)

Rated Line Frequency	50-60 Hz	50-60 Hz
Power Output	240W	240W
Rated Input Current (maximum)[1]		
STD PS	4A @ 100 VAC	2A @ 230 VAC
EPA 87/89/85% @ 20/50/100% load PS	4A @ 100 VAC	2A @ 230 VAC

[1] This system utilizes an active power factor corrected power supply. This allows the system to pass the CE mark requirements for use in the countries of the European Union. The active power factor corrected power supply also has the added benefit of not requiring an input voltage range select switch.

B Battery Replacement

The battery that comes with the computer provides power to the real-time clock. When replacing the battery, use a battery equivalent to the battery originally installed in the computer. The computer comes with a 3-volt lithium coin cell battery.

WARNING! The computer contains an internal lithium manganese dioxide battery. There is a risk of fire and burns if the battery is not handled properly. To reduce the risk of personal injury:

Do not attempt to recharge the battery.

Do not expose to temperatures higher than 60°C (140ºF).

Do not disassemble, crush, puncture, short external contacts, or dispose of in fire or water.

Replace the battery only with the HP spare designated for this product.

CAUTION: Before replacing the battery, it is important to back up the computer CMOS settings. When the battery is removed or replaced, the CMOS settings will be cleared. Refer to the *Computer Setup (F10) Utility Guide* for information on backing up the CMOS settings.

Static electricity can damage the electronic components of the computer or optional equipment. Before beginning these procedures, ensure that you are discharged of static electricity by briefly touching a grounded metal object.

NOTE: The lifetime of the lithium battery can be extended by plugging the computer into a live AC wall socket. The lithium battery is only used when the computer is NOT connected to AC power.

HP encourages customers to recycle used electronic hardware, HP original print cartridges, and rechargeable batteries. For more information about recycling programs, go to http://www.hp.com/recycle.

1. Remove/disengage any security devices that prohibit opening the computer.
2. Remove all removable media, such as compact discs or USB flash drives, from the computer.
3. Turn off the computer properly through the operating system, then turn off any external devices.
4. Disconnect the power cord from the power outlet and disconnect any external devices.

   CAUTION: Regardless of the power-on state, voltage is always present on the system board as long as the system is plugged into an active AC outlet. You must disconnect the power cord to avoid damage to the internal components of the computer.

5. If the computer is on a stand, remove the computer from the stand.
6. Remove the access panel.
7. Locate the battery and battery holder on the system board.

NOTE: On some computer models, it may be necessary to remove an internal component to gain access to the battery.

8. Depending on the type of battery holder on the system board, complete the following instructions to replace the battery.

Type 1

a. Lift the battery out of its holder.

Figure B-1 Removing a Coin Cell Battery (Type 1)

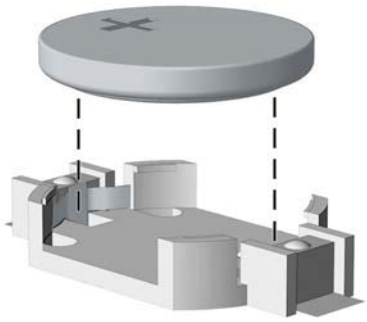

b. Slide the replacement battery into position, positive side up. The battery holder automatically secures the battery in the proper position.

Type 2

a. To release the battery from its holder, squeeze the metal clamp that extends above one edge of the battery. When the battery pops up, lift it out (1).

b. To insert the new battery, slide one edge of the replacement battery under the holder's lip with the positive side up. Push the other edge down until the clamp snaps over the other edge of the battery (2).

Figure B-2 Removing and Replacing a Coin Cell Battery (Type 2)

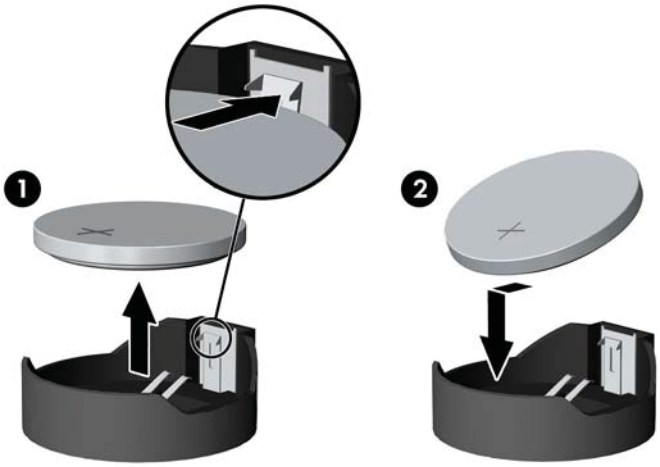

Type 3

a. Pull back on the clip (1) that is holding the battery in place, and remove the battery (2).

b. Insert the new battery and position the clip back into place.

Figure B-3 Removing a Coin Cell Battery (Type 3)

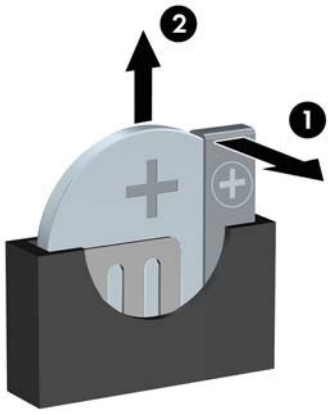

NOTE: After the battery has been replaced, use the following steps to complete this procedure.

9. Replace the access panel.
10. If the computer was on a stand, replace the stand.
11. Plug in the computer and turn on power to the computer.
12. Reset the date and time, your passwords, and any special system setups using Computer Setup. Refer to the *Computer Setup (F10) Utility Guide*.
13. Lock any security devices that were disengaged when the access panel was removed.

C External Security Devices

NOTE: For information on data security features, refer to the *Computer Setup (F10) Utility Guide*, the *Desktop Management Guide*, and the *HP ProtectTools Security Manager Guide* (some models) at http://www.hp.com.

Installing a Security Lock

The security locks displayed below and on the following pages can be used to secure the computer.

Cable Lock

Figure C-1 Installing a Cable Lock

Padlock

Figure C-2 Installing a Padlock

HP Business PC Security Lock

1. Fasten the security cable by looping it around a stationary object.

   Figure C-3 Securing the Cable to a Fixed Object

2. Thread the keyboard and mouse cables through the lock.

Figure C-4 Threading the Keyboard and Mouse Cables

3. Screw the lock to the chassis using the screw provided.

Figure C-5 Attaching the Lock to the Chassis

4. Insert the plug end of the security cable into the lock (1) and push the button in (2) to engage the lock. Use the key provided to disengage the lock.

Figure C-6 Engaging the Lock

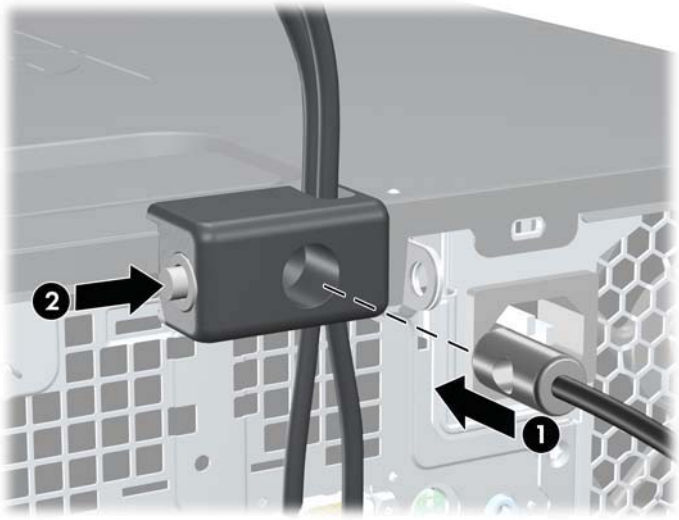

Front Bezel Security

The front bezel can be locked in place by installing a security screw provided by HP. To install the security screw:

1. Remove/disengage any security devices that prohibit opening the computer.
2. Remove all removable media, such as compact discs or USB flash drives, from the computer.
3. Turn off the computer properly through the operating system, then turn off any external devices.
4. Disconnect the power cord from the power outlet and disconnect any external devices.

   △ **CAUTION:** Regardless of the power-on state, voltage is always present on the system board as long as the system is plugged into an active AC outlet. You must disconnect the power cord to avoid damage to the internal components of the computer.

5. If the computer is on a stand, remove the computer from the stand.
6. Remove the access panel and front bezel.

7. Remove one of the five silver 6-32 standard screws located on the front of the chassis behind the bezel.

Figure C-7 Retrieving the Front Bezel Security Screw

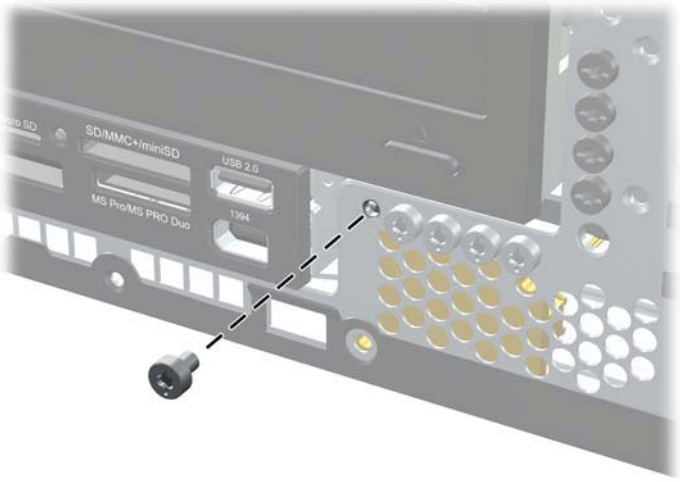

8. Replace the front bezel.

9. Install the security screw next to the middle front bezel release tab to secure the front bezel in place.

Figure C-8 Installing the Front Bezel Security Screw

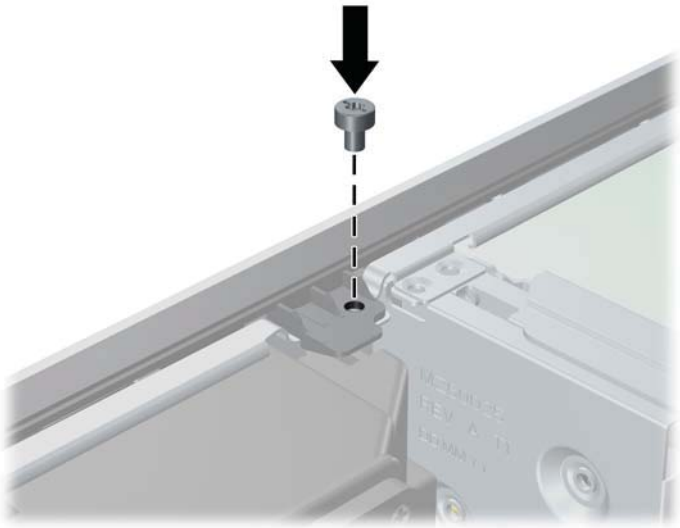

10. Replace the access panel.

11. If the computer was on a stand, replace the stand.

12. Reconnect the power cord and turn on the computer.

13. Lock any security devices that were disengaged when the access panel was removed.

D Electrostatic Discharge

A discharge of static electricity from a finger or other conductor may damage system boards or other static-sensitive devices. This type of damage may reduce the life expectancy of the device.

Preventing Electrostatic Damage

To prevent electrostatic damage, observe the following precautions:

- Avoid hand contact by transporting and storing products in static-safe containers.
- Keep electrostatic-sensitive parts in their containers until they arrive at static-free workstations.
- Place parts on a grounded surface before removing them from their containers.
- Avoid touching pins, leads, or circuitry.
- Always be properly grounded when touching a static-sensitive component or assembly.

Grounding Methods

There are several methods for grounding. Use one or more of the following methods when handling or installing electrostatic-sensitive parts:

- Use a wrist strap connected by a ground cord to a grounded workstation or computer chassis. Wrist straps are flexible straps with a minimum of 1 megohm +/- 10 percent resistance in the ground cords. To provide proper ground, wear the strap snug against the skin.
- Use heelstraps, toestraps, or bootstraps at standing workstations. Wear the straps on both feet when standing on conductive floors or dissipating floor mats.
- Use conductive field service tools.
- Use a portable field service kit with a folding static-dissipating work mat.

If you do not have any of the suggested equipment for proper grounding, contact an HP authorized dealer, reseller, or service provider.

NOTE: For more information on static electricity, contact an HP authorized dealer, reseller, or service provider.

E Computer Operating Guidelines, Routine Care and Shipping Preparation

Computer Operating Guidelines and Routine Care

Follow these guidelines to properly set up and care for the computer and monitor:

- Keep the computer away from excessive moisture, direct sunlight, and extremes of heat and cold.
- Operate the computer on a sturdy, level surface. Leave a 10.2-cm (4-inch) clearance on all vented sides of the computer and above the monitor to permit the required airflow.
- Never restrict the airflow into the computer by blocking any vents or air intakes. Do not place the keyboard, with the keyboard feet down, directly against the front of the desktop unit as this also restricts airflow.
- Never operate the computer with the access panel or any of the expansion card slot covers removed.
- Do not stack computers on top of each other or place computers so near each other that they are subject to each other's re-circulated or preheated air.
- If the computer is to be operated within a separate enclosure, intake and exhaust ventilation must be provided on the enclosure, and the same operating guidelines listed above will still apply.
- Keep liquids away from the computer and keyboard.
- Never cover the ventilation slots on the monitor with any type of material.
- Install or enable power management functions of the operating system or other software, including sleep states.
- Turn off the computer before you do either of the following:
    - Wipe the exterior of the computer with a soft, damp cloth as needed. Using cleaning products may discolor or damage the finish.
    - Occasionally clean the air vents on all vented sides of the computer. Lint, dust, and other foreign matter can block the vents and limit the airflow.

Optical Drive Precautions

Be sure to observe the following guidelines while operating or cleaning the optical drive.

Operation

- Do not move the drive during operation. This may cause it to malfunction during reading.
- Avoid exposing the drive to sudden changes in temperature, as condensation may form inside the unit. If the temperature suddenly changes while the drive is on, wait at least one hour before you turn off the power. If you operate the unit immediately, it may malfunction while reading.
- Avoid placing the drive in a location that is subject to high humidity, extreme temperatures, mechanical vibration, or direct sunlight.

Cleaning

- Clean the panel and controls with a soft, dry cloth or a soft cloth lightly moistened with a mild detergent solution. Never spray cleaning fluids directly on the unit.
- Avoid using any type of solvent, such as alcohol or benzene, which may damage the finish.

Safety

If any object or liquid falls into the drive, immediately unplug the computer and have it checked by an authorized HP service provider.

Shipping Preparation

Follow these suggestions when preparing to ship the computer:

1. Back up the hard drive files on PD discs, tape cartridges, CDs, or USB flash drives. Be sure that the backup media is not exposed to electrical or magnetic impulses while stored or in transit.

   NOTE: The hard drive locks automatically when the system power is turned off.

2. Remove and store all removable media.
3. Turn off the computer and external devices.
4. Disconnect the power cord from the electrical outlet, then from the computer.
5. Disconnect the system components and external devices from their power sources, then from the computer.

   NOTE: Ensure that all boards are seated properly and secured in the board slots before shipping the computer.

6. Pack the system components and external devices in their original packing boxes or similar packaging with sufficient packing material to protect them.

Index

A
access panel
  locking and unlocking 52
audio connectors 2, 4

B
battery replacement 49

C
computer
  specifications 47
computer access panel
  removing 9
  replacing 10
computer operating guidelines 58
connecting drive cables 27

D
DIMMs. *See* memory
drives
  connecting cables 27
  installing 27
  locations 26

E
electrostatic discharge, preventing damage 57
expansion card
  installing 20
  removing 20
  slot locations 20
expansion slot cover
  removing 21
  replacing 23

F
front bezel
  removing 11
  removing blanks 12
  replacing 13
  security 55
front panel components 2

G
guide screws 27

H
hard drive
  installing 39
  installing secondary 37
  removing 39
headphone connector 2

I
installation guidelines 8
installing
  battery 49
  drive cables 27
  expansion card 20
  guide screws 27
  hard drive 39
  media card reader 37
  memory 15
  optical drive 32
  removable hard drive 43
  security locks 52

K
keyboard
  components 5
  connector 4

L
line-in connector 4
line-out connector 4
locks
  cable lock 52
  front bezel 55
  HP Business PC Security Lock 53
  padlock 53

M
media card reader
  features 3
  installing 37
  removing 35
memory
  installing 15
  populating sockets 16
  specifications 15
microphone connector 2
monitor connector
  DisplayPort 4
  VGA 4
mouse connector 4

N
network connector 4

O
optical drive
  cleaning 59
  installing 32
  precautions 59
  removing 30

P
PCI card 20, 22
PCI Express card 20, 23
power supply 47
product ID location 7

R
rear panel components 4
removable hard drive
  replacing 43

removing
battery 49
bezel blanks 12
computer access panel 9
expansion card 20
expansion slot cover 21
front bezel 11
hard drive 39
media card reader 35
optical drive 30
PCI card 22
PCI Express card 23

S

security
cable lock 52
front bezel 55
HP Business PC Security Lock 53
padlock 53
serial connector 4
serial number location 7
shipping preparation 59
specifications
computer 47
memory 15
system board drive connections 29

T

tower orientation 14

U

unlocking access panel 52
USB ports
front panel 2
rear panel 4

V

ventilation guidelines 58

W

Windows Logo key 6