HP Color LaserJet CP2020 Series User Guide

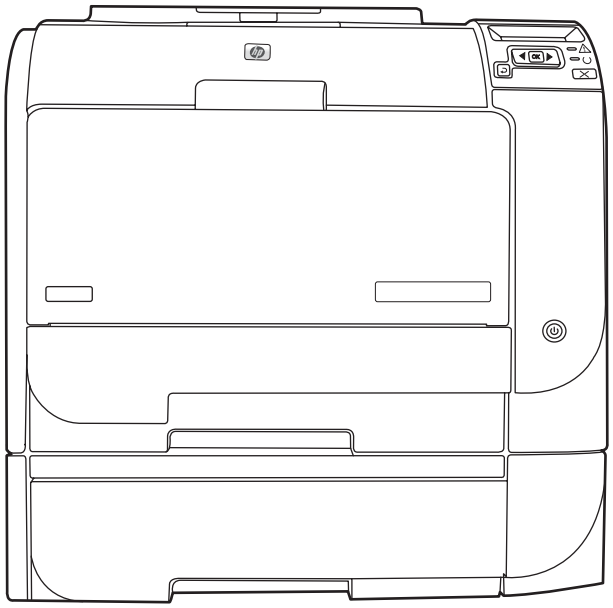

invent

HP Color LaserJet CP2020 Series
User Guide

Copyright and License

© 2008 Copyright Hewlett-Packard Development Company, L.P.

Reproduction, adaptation, or translation without prior written permission is prohibited, except as allowed under the copyright laws.

The information contained herein is subject to change without notice.

The only warranties for HP products and services are set forth in the express warranty statements accompanying such products and services. Nothing herein should be construed as constituting an additional warranty. HP shall not be liable for technical or editorial errors or omissions contained herein.

Edition 2, 09/2008

Part number: CB493-90908

Trademark Credits

Adobe®, Acrobat®, and PostScript® are trademarks of Adobe Systems Incorporated.

ENERGY STAR® and the ENERGY STAR logo® are U.S. registered marks of the United States Environmental Protection Agency.

Corel® is a trademark or registered trademark of Corel Corporation or Corel Corporation Limited.

Microsoft®, Windows®, and Windows®XP are U.S. registered trademarks of Microsoft Corporation.

Windows Vista™ is either a registered trademark or trademark of Microsoft Corporation in the United States and/or other countries.

Table of contents

1 Product basics

Product comparison 2
Product features 2
Walkaround 4
Front and side view 4
Back view 4
Model and serial numbers 5

2 Control panel

Control-panel walkaround 8
Control-panel menus 9
Use the menus 9
Reports menu 10
System setup menu 11
Service menu 14
Network config. menu 15

3 Software for Windows

Supported operating systems for Windows 18
Supported printer drivers for Windows 19
HP Universal Print Driver (UPD) 20
UPD installation modes 20
Select the correct printer driver for Windows 21
Priority for print settings 22
Change printer-driver settings for Windows 23
Install the Windows software 24
Software installation types for Windows 24
Remove software for Windows 24
Supported utilities 25
HP Web Jetadmin 25
Embedded Web server 25
HP ToolboxFX 26
Other Windows components and utilities 26

4 Use the product with Macintosh

Software for Macintosh 28
Supported operating systems for Macintosh 28
Supported printer drivers for Macintosh 28
Priority for print settings for Macintosh 28
Change printer-driver settings for Macintosh 28
Supported utilities for Macintosh 29
View embedded Web server using a Macintosh 29
Use features in the Macintosh printer driver 30
Create and use printing presets in Macintosh 30
Resize documents or print on a custom paper size 30
Print a cover page 30
Use watermarks 31
Print multiple pages on one sheet of paper in Macintosh 31
Print on both sides of the page (duplex printing) 31
Set the color options 32
Use the Services menu 32

5 Connectivity

Supported network operating systems 34
Printer sharing disclaimer 34
USB connection 35
Supported network protocols 36
Configure the product on the network 38
Set up the product on the network 38
View settings 38
Network configuration page 38
Configuration page 38
IP address 39
Manual configuration 39
Automatic configuration 39
Show or hide the IP address on the control panel 40
Set automatic crossover 40
Set network services 40
Restore defaults (network settings) 41
TCP/IP 41
IP address 41
Configure IP parameters 41
Dynamic Host Configuration Protocol (DHCP) 41
BOOTP 41
Subnets 42
Subnet mask 42
Gateways 42

Default gateway 42

6 Paper and print media
Understand paper and print media use 44
Supported paper and print media sizes 45
Supported paper types and tray capacity 47
Special paper or print media guidelines 49
Load paper and print media 50

7 Print tasks
Cancel a print job 54
Cancel the current print job at the product control panel 54
Cancel the current print job from the software program 54
Use features in the Windows printer driver 55
Open the printer driver 55
Use printing shortcuts 55
Set paper and quality options 55
Set document effects 55
Set document finishing options 56
Obtain support and product-status information 56
Set advanced printing options 56

8 Color for Windows
Manage color 60
Automatic 60
Print in Grayscale 60
Manual color adjustment 60
Manual color options 60
Color themes 61
Match colors 62
Match colors using the Microsoft Office Basic Colors palette 62
Match colors using the HP Basic Color Match tool 62
Match colors using View Custom Colors 63
Advanced color use 64
HP ColorSphere toner 64
HP ImageREt 3600 64
Media selection 64
Color options 64
Standard red-green-blue (sRGB) 64

9 Manage and maintain
Information pages 68
HP ToolboxFX 69

Open HP ToolboxFX 69
Status 70
Event log 70
Alerts 71
Set up Status Alerts 71
Set up E-mail Alerts 71
Product information 71
Set password 71
Help 72
Device Settings 73
Device Information 73
Paper Handling 74
Printing 74
PCL5c 74
PostScript 74
Print Quality 75
Print Density 75
Paper Types 75
System Setup 75
Save/Restore Settings 75
Password 75
Service 76
Network Settings 76
Shop for Supplies 76
Other Links 76
Embedded Web server 77
View the HP embedded Web server 77
Embedded Web server sections 78
Manage supplies 80
Supplies life 80
Print-cartridge storage 80
HP policy on non-HP print cartridges 80
HP fraud hotline and Web site 80
Print when cartridge has reached estimated end of life 81
Replace print cartridges 82
Memory and font DIMMs 86
Product memory 86
Install memory and font DIMMs 86
Enable memory 90
Enable memory for Windows 90
Check DIMM installation 90
Clean the product 90
Firmware updates 91

10 Solve problems

Basic troubleshooting checklist 94
Factors that affect product performance 94
Control-panel and status-alert messages 95
Clear jams 101
Common causes of jams 101
Jam locations 102
Change Jam Recovery setting 102
Clear jams in tray 1 102
Clear jams in tray 2 103
Clear jams in tray 3 104
Clear jams in fuser area 105
Clear jams in output bin 107
Clear jams in duplexer (duplexing models only) 107
Solve image-quality problems 110
Identify and correct print defects 110
Print-quality checklist 110
General print quality issues 111
Solve issues with color documents 115
Use HP ToolboxFX to troubleshoot print-quality problems 117
Optimize and improve print quality 118
Calibrate the product 118
Performance problems 119
Product software problems 120
Solve Macintosh problems 121
Solve problems with Mac OS X 121

Appendix A Supplies and accessories

Order supplies and accessories 125

Appendix B Service and support

Hewlett-Packard limited warranty statement 128
Print cartridge limited warranty statement 129
End User License Agreement 130
Customer support 132
Repack the product 133
Service information form 134

Appendix C Specifications

Physical specifications 136
Electrical specifications 137
Acoustic emissions 138
Environmental specifications 138

Appendix D Regulatory information

FCC regulations 140
Environmental product stewardship program 141
Protecting the environment 141
Ozone production 141
Power consumption 141
Paper use 141
Plastics 141
HP LaserJet print supplies 141
Return and recycling instructions 142
United States and Puerto Rico 142
Multiple returns (two to eight cartridges) 142
Single returns 142
Shipping 142
Non-US returns 142
Paper 142
Material restrictions 142
Disposal of waste equipment by users in private households in the European Union 143
Material Safety Data Sheet (MSDS) 143
For more information 143
Declaration of conformity 144
Country/region specific statements 145
Laser safety 145
Canadian DOC regulations 145
VCCI statement (Japan) 145
Power cord statement (Japan) 145
EMI statement (Korea) 145
Laser statement for Finland 146
Substances Table (China) 147

Index 149

1 Product basics

- Product comparison
- Product features
- Walkaround

Product comparison

HP Color LaserJet CP2020 Series Printer

- Prints up to 21 pages per minute (ppm) on letter-size media.
- 50-sheet multipurpose tray (tray 1) and 250-sheet input tray (tray 2)
- Optional 250-sheet input tray (tray 3) (standard on HP Color LaserJet CP2020x)
- Hi-Speed universal serial bus (USB) 2.0 port
- Built-in networking to connect to 10Base-T/100Base-TX networks (HP Color LaserJet CP2020n, HP Color LaserJet CP2020dn, and HP Color LaserJet CP2020x)
- Automatic duplexer (HP Color LaserJet CP2020dn and HP Color LaserJet CP2020x)

Product features

Print	• Prints up to 21 pages per minute (ppm) on letter-size media. • Prints at 600 dots per inch (dpi). • Includes adjustable settings to optimize print quality. • The print cartridges use HP ColorSphere toner. For information about the number of pages the cartridges can print, see www.hp.com/go/pageyield. Actual yield depends on specific use. • Offers automatic duplexing (HP Color LaserJet CP2020dn and HP Color LaserJet CP2020x only).
Memory	• Includes 128-megabyte (MB) random-access memory (RAM).
Supported operating systems	• Windows 2000 • Windows XP Home/Professional • Windows Server 2003 (32-bit only) • Windows Vista • Mac OS X V10.28 and later
Paper handling	• Tray 1 (multipurpose tray) holds up to 50 sheets of print media or 10 envelopes. • Tray 2 holds up to 250 sheets of print media. • Optional Tray 3 holds up to 250 sheets of print media. • Output bin holds up to 125 sheets of print media.
Printer driver features	• ImageREt 3600 produces 3600 dpi print quality for fast, high-quality printing of business text and graphics.
Interface connections	• Includes a Hi-Speed USB 2.0 port • Built-in networking to connect to 10Base-T/100Base-TX networks.
Environmental features	• To determine the ENERGY STAR® qualification status for this product see the Product Data Sheet or Specifications Sheet.

Economical printing	• Provides N-up printing (printing more than one page on a sheet). • The printer driver provides the option to manually print on both sides.
Supplies	• Uses print cartridges with HP ColorSphere toner.
Accessibility	• Online user guide is compatible with text screen-readers. • Print cartridges can be installed and removed by using one hand. • All doors and covers can be opened by using one hand.

Walkaround

Front and side view

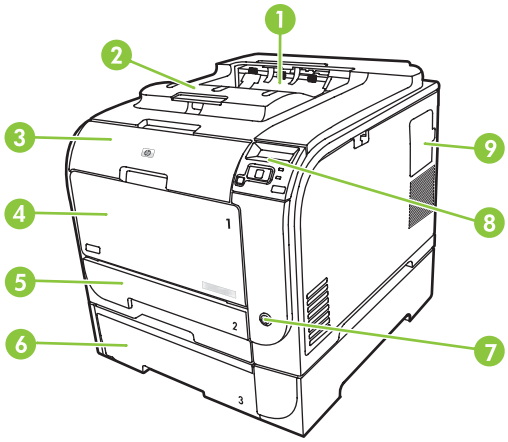

1	Output bin (holds 125 sheets of standard paper)
2	Legal-output extension
3	Front door (provides access to the print cartridges)
4	Tray 1 (multipurpose tray)
5	Tray 2 (holds 250 sheets of standard paper and provides jam access)
6	Optional tray 3 (holds 250 sheets of standard paper)
7	Power switch
8	Control panel
9	DIMM door (for adding additional memory)

Back view

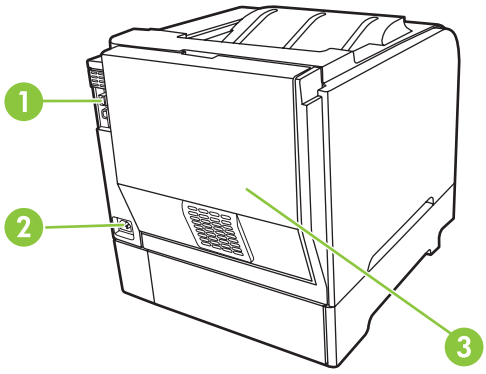

1	Hi-Speed USB 2.0 port and network port. (Network port present on HP Color LaserJet CP2020n, HP Color LaserJet CP2020dn, and HP Color LaserJet CP2020x models only.)

2	Power connection
3	Rear door (for jam access)

Model and serial numbers

The model number and serial number are listed on an identification label located inside the front door.

The label contains information about the country/region of origin and the revision level, manufacturing date, production code, and production number of the product. The label also contains power rating and regulatory information.

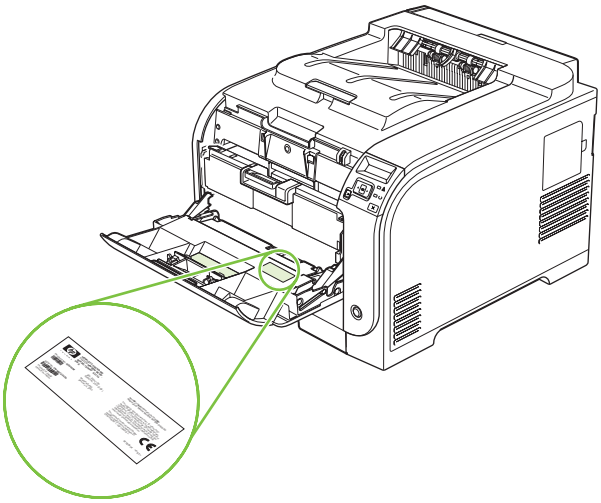

2 Control panel

- Control-panel walkaround
- Control-panel menus

Control-panel walkaround

The product has the following items on the control panel.

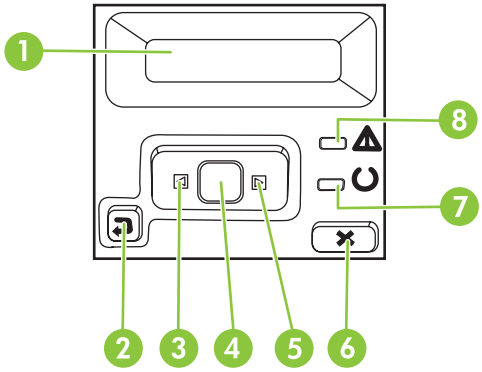

1	**Control-panel display**: The display provides information about the product. Use the menus on the display to establish product settings.
2	Back arrow (⮌) button: Use this button for the following actions: • Exit the control-panel menus. • Scroll back to a previous menu in a submenu list. • Scroll back to a previous menu item in a submenu list (without saving changes to the menu item).
3	Left arrow (◄) button: Use this button to navigate through the menus or to decrease a value that appears on the display.
4	OK button: Press the OK button for the following actions: • Open the control-panel menus. • Open a submenu displayed on the control-panel display. • Select a menu item. • Clear some errors. • Begin a print job in response to a control-panel prompt (for example, when the message **[OK] to print** appears on the control-panel display).
5	Right arrow (►) button: Use this button to navigate through the menus or to increase a value that appears on the display.
6	Cancel Job (X) button: Press this button to cancel a print job whenever the attention light is blinking or to exit the control-panel menus.
7	Ready light (green): The Ready light is on when the product is ready to print. It blinks when the product is receiving print data.
8	Attention light (amber): The Attention light blinks when the product requires user attention.

Control-panel menus

Use the menus

1. Press OK to open the menus.
2. Press the Left arrow (◄) or Right arrow (►) button to navigate through the listings.
3. Press OK to select the appropriate option. An asterisk (*) appears next to the active selection.
4. Press the Back arrow (⮌) button to scroll back through the submenus.
5. Press X to exit the menu without saving any changes.

The sections that follow describe the options for each of the main menus:

- Reports menu on page 10
- System setup menu on page 11
- Network config. menu on page 15
- Service menu on page 14

Reports menu

Use the **Reports** menu to print reports that provide information about the product.

Menu item	Description
Demo page	Prints a color page that demonstrates print quality.
Menu structure	Prints a map of the control-panel-menu layout.
Config report	Prints a list of all the product settings. Includes network information when the product is connected to a network.
Supplies status	Prints the status for each print cartridge, including the following information: • Approximate pages remaining • Approximate percentage of cartridge life remaining for each color • Part number • Number of pages printed
Network report	Prints a list of all product network settings
Usage page	Prints a page that lists PCL pages, PCL 6 pages, HP postscript level 3 emulation pages, pages that were jammed or mispicked in the product, monochrome (black and white) or color pages; and reports the page count
PCL font list	Prints a list of all the PCL fonts that are installed.
PS font list	Prints a list of all the PostScript (PS) fonts that are installed
PCL6 font list	Prints a list of all the PCL6 fonts that are installed
Color usage log	Prints a report that shows the user name, application name, and color usage information on a job-by-job basis
Service page	Prints the service report
Diagnostics page	Prints the calibration and color diagnostics pages

System setup menu

Use this menu to establish basic product settings. The **System setup** menu has several sub-menus. Each is described in the following table.

Menu item	Sub-menu item	Sub-menu item	Description
Language			Select the language for the control-panel display messages and the product reports.
Paper setup	**Def. paper size**	**Letter** **A4** **Legal**	Select the size for printing internal reports or any print job that does not specify a size.
	Def. paper type	A list of available media types appears.	Select the media type for printing internal reports or any print job that does not specify a type.
	Tray 1	**Paper size** **Paper type**	Select the default size and type for tray 1 from the list of available sizes and types.
	Tray 2	**Paper size** **Paper type**	Select the default size and type for tray 2 from the list of available sizes and types.
	Tray 3	**Paper size** **Paper type**	If optional tray 3 is installed, select the default size and type for tray 3 from the list of available sizes and types.
	Paper out action	**Wait forever** **Override** **Cancel**	Select how the product should react when a print job requires a size or type that is not available or when a specified tray is empty. Select **Wait forever** to make the product wait until you load the correct media and press OK. This is the default setting. Select **Override** to print on a different size or type after a specified delay. Select **Cancel** to automatically cancel the print job after a specified delay. If you select either **Override** or **Cancel**, the control panel prompts you to specify the number of seconds to delay. Press the Right arrow (►) button to increase the time, up to 3600 seconds. Press the Left arrow (◄) button to decrease the time.
Print quality	**Restrict color**	**Enable color** **Disable color**	Select **Enable color** to allow the job to print in monochrome (black and white) or color depending on the job. This is the default setting. Select **Disable color** to disable color printing. All jobs will print in monochrome (black and white). Some internal pages will still print in color.

Menu item	Sub-menu item	Sub-menu item	Description
	Calibrate color	**After power on** **Calibrate now**	**After power on**: Select how soon the product should calibrate after you turn it on. The default setting is **15 minutes**. **Calibrate now**: Makes the product perform a calibration immediately. If a job is processing, the product calibrates after the job is complete. If an error message is displayed, you must clear the error first.
	Cartridge low	**(1-20)**	The percentage threshold determines when the product begins reporting low toner. The message is either reported on the control-panel display or using the toner LED, if it exists.
	Replace supplies	**Override out** **Stop at out**	**Override out**: If the product determines that a print cartridge has reached the end of its estimated life, select this setting to continue printing. Using this option will eventually result in unacceptable print quality. Consider having a replacement cartridge available for when the print quality becomes unacceptable. **Stop at out**: If the product determines that a print cartridge has reached the end of its estimated life, select this setting to stop printing. This is the default setting. Printing beyond this point is possible using **Override out**. The supply does not need to be replaced now unless the print quality is no longer acceptable. Information about the remaining toner is not available when printing in **Override out** mode. Once an HP supply has reached the end of its estimated life, HP's Premium Protection Warranty on that supply has ended. For Warranty information, see Print cartridge limited warranty statement on page 129.
	Color Supply Out	**Stop Printing** (default) **Continue Black**	**Stop Printing**: If the product determines that a color cartridge has reached its estimated end of life, it stops printing. This is the default setting. **Continue Black**: If the product determines that a color cartridge has reached the end of its estimated life, continue printing using black only.
	Adjust Alignment	**Print Test Page** **Adjust Tray <X>**	**Print Test Page**: Print a test page that tests printer alignment. **Adjust Tray <X>**: Adjust the alignment of the specified tray.
Display contrast	**Lightest**		Select the level of contrast for the display. The default setting is **Medium**.

Menu item	Sub-menu item	Sub-menu item	Description
	Lighter		
	Medium		
	Darker		
	Darkest		

Service menu

Use this menu to restore default settings, clean the product, and activate special modes that affect print output.

Menu item	Sub-menu item	Description
Cleaning mode		Use this option to clean the product if you see toner specks or other marks on the printed output. The cleaning process removes dust and excess toner from the paper path. When you select this item, the product prompts you to load plain paper in tray 1 and then press OK to start the cleaning process. Wait until the process is complete. Discard the page that prints.
PowerSave		Sets how long the product remains idle before it enters **PowerSave** mode. The product automatically exits **PowerSave** mode when you send a print job or press a control-panel button. The default setting is **15 minutes**.
USB speed	**High** **Full**	Sets the USB speed to **High** or **Full**. For the product to actually operate at high speed, it must have high speed enabled and be connected to an EHCI host controller that is also operating at high speed. This menu item also does not reflect the current operating speed of the product. The default setting is **High**.
Less paper curl	**Off** **On**	If printed pages are consistently curled, use this option to set the product to a mode that reduces curl. The default setting is **Off**.
Archive print	**Off** **On**	If you are printing pages that will be stored for a long time, use this option to set the product to a mode that reduces toner smearing and dusting. The default setting is **Off**.
Restore defaults	**Yes** **No**	Sets all customized settings to the factory default values.

Network config. menu

Use this menu to establish network configuration settings.

Menu item	Sub-menu item	Description
TCP/IP config	**Automatic** **Manual**	Select **Automatic** to automatically configure all the TCP/IP settings. Select **Manual** to manually configure the IP address, subnet mask, and default gateway. The default setting is **Automatic**.
Auto crossover	**On** **Off**	This item is used when you are connecting the product directly to a personal computer using an Ethernet cable (you might have to set this to **On** or **Off** depending on the computer being used). The default setting is **On**.
Network services	**IPv4** **IPv6** **DHCPv6**	This item is used by the network administrator to limit the network services available on this product. **On** **Off** The default setting for all items is **On**.
Show IP address	**No** **Yes**	**No**: The product IP address will not appear on the control-panel display. **Yes**: The product IP address will appear on the control-panel display, alternating between supplies information and the IP address of the device. The IP address will not be displayed if an error condition exits. The default setting is **No**.
Link speed	**Automatic** (default) **10T Full** **10T Half** **100TX Full** **100TX Half**	Sets the link speed manually if needed. After setting the link speed, the product automatically restarts.
Restore defaults		Press OK to restore the network configuration settings to the default values.

3 Software for Windows

- Supported operating systems for Windows
- Supported printer drivers for Windows
- HP Universal Print Driver (UPD)
- Select the correct printer driver for Windows
- Priority for print settings
- Change printer-driver settings for Windows
- Install the Windows software
- Supported utilities

Supported operating systems for Windows

The product supports the following Windows operating systems:

- Windows XP (32-bit and 64-bit)
- Windows Server 2003 (32-bit and 64-bit)
- Windows 2000
- Windows Vista

Supported printer drivers for Windows

- PCL 6
- HP postscript level 3 emulation

The printer drivers include online Help that has instructions for common printing tasks and also describes the buttons, checkboxes, and drop-down lists that are in the printer driver.

NOTE: The Postscript driver that supports this product is the Postscript version of the HP Universal Print Driver (UPD) for Windows. It installs and operates in the same manner as previous versions of Postscript drivers, and it does not require any special configuration. For more information about the UPD, see www.hp.com/go/upd.

HP Universal Print Driver (UPD)

The HP Universal Print Driver (UPD) for Windows is a single driver that gives you instant access to virtually any HP LaserJet product, from any location, without downloading separate drivers. It is built on proven HP print driver technology and has been tested thoroughly and used with many software programs. It is a powerful solution that performs consistently over time.

The HP UPD communicates directly with each HP product, gathers configuration information, and then customizes the user interface to show the product's unique, available features. It automatically enables features that are available for the product, such as two-sided printing and stapling, so you do not need to enable them manually.

For more information, go to www.hp.com/go/upd.

UPD installation modes

Traditional mode	• Use this mode if you are installing the driver from a CD for a single computer. • When installed with this mode, UPD operates like traditional printer drivers. • If you use this mode, you must install UPD separately for each computer.
Dynamic mode	• Use this mode if you are installing the driver for a mobile computer, so you can discover and print to HP products in any location. • Use this mode if you are installing UPD for a workgroup. • To use this mode, download UPD from the Internet. See www.hp.com/go/upd.

Select the correct printer driver for Windows

Printer drivers provide access to the product features and allow the computer to communicate with the product (using a printer language). Check the installation notes and readme files on the device CD for additional software and languages.

HP PCL 6 driver description

- Recommended for printing in all Windows environments
- Provides the overall best speed, print quality, and product-feature support for most users
- Developed to align with the Windows Graphic Device Interface (GDI) for the best speed in Windows environments
- Might not be fully compatible with third-party and custom software programs that are based on PCL 5

HP Universal Print Driver for Windows - Postscript description

- Recommended for printing with Adobe® software programs or with other highly graphics-intensive software programs
- Provides support for printing from Postscript needs
- Performs slightly faster than the PCL 6 driver when using Adobe software programs

Priority for print settings

Changes to print settings are prioritized depending on where the changes are made:

NOTE: The names of commands and dialog boxes might vary depending on your software program.

- **Page Setup dialog box**: Click **Page Setup** or a similar command on the **File** menu of the program you are working in to open this dialog box. Settings changed here override settings changed anywhere else.
- **Print dialog box**: Click **Print**, **Print Setup**, or a similar command on the **File** menu of the program you are working in to open this dialog box. Settings changed in the **Print** dialog box have a lower priority and do *not* override changes made in the **Page Setup** dialog box.
- **Printer Properties dialog box (printer driver)**: Click **Properties** in the **Print** dialog box to open the printer driver. Settings changed in the **Printer Properties** dialog box do not override settings anywhere else in the printing software.
- **Default printer driver settings**: The default printer driver settings determine the settings used in all print jobs, *unless* settings are changed in the **Page Setup**, **Print**, or **Printer Properties** dialog boxes.
- **Printer control panel settings**: Settings changed at the printer control panel have a lower priority than changes made anywhere else.

Change printer-driver settings for Windows

Change the settings for all print jobs until the software program is closed	Change the default settings for all print jobs	Change the product configuration settings
1. On the **File** menu in the software program, click **Print**. 2. Select the driver, and then click **Properties** or **Preferences**. The steps can vary; this procedure is most common.	1. **Windows XP and Windows Server 2003 (using the default Start menu view)**: Click **Start**, and then click **Printers and Faxes**. **-or-** **Windows 2000, Windows XP, and Windows Server 2003 (using the Classic Start menu view)**: Click **Start**, click **Settings**, and then click **Printers**. **-or-** **Windows Vista**: Click **Start**, click **Control Panel**, and then in the category for **Hardware and Sound** click **Printer**. 2. Right-click the driver icon, and then select **Printing Preferences**.	1. **Windows XP and Windows Server 2003 (using the default Start menu view)**: Click **Start**, and then click **Printers and Faxes**. **-or-** **Windows 2000, Windows XP, and Windows Server 2003 (using the Classic Start menu view)**: Click **Start**, click **Settings**, and then click **Printers**. **-or-** **Windows Vista**: Click **Start**, click **Control Panel**, and then in the category for **Hardware and Sound** click **Printer**. 2. Right-click the driver icon, and then select **Properties**. 3. Click the **Device Settings** tab.

Install the Windows software

Software installation types for Windows

You can choose from the following types of software installations:

- **Recommended**. Installs all of the software for the product, including the user guide. This can be selected for either direct connect (USB) or network installations.
- **Express USB Install**. Installs the minimum software for a product that uses a direct USB connection. Selecting this install method indicates your acceptance of HP's Software License terms.
- **Express Network Install**. Installs the minimum software for a product that is connected to a network. Selecting this install method indicates your acceptance of HP's Software License terms.

Remove software for Windows

1. Click **Start**, and then click **All Programs**.
2. Click **HP**, and then click **HP Color LaserJet CP2020 Series Printer**.
3. Click **Uninstall HP Color LaserJet CP2020 Series Printer**, and then follow the onscreen instructions to remove the software.

Supported utilities

HP Web Jetadmin

HP Web Jetadmin is a browser-based management tool for HP Jetdirect-connected printers within your intranet, and it should be installed only on the network administrator's computer.

To download a current version of HP Web Jetadmin and for the latest list of supported host systems, visit www.hp.com/go/webjetadmin.

When installed on a host server, a Windows client can gain access to HP Web Jetadmin by using a supported Web browser (such as Microsoft® Internet Explorer 4.x or Netscape Navigator 4.x or later) by navigating to the HP Web Jetadmin host.

Embedded Web server

The device is equipped with an embedded Web server, which provides access to information about device and network activities. This information appears in a Web browser, such as Microsoft Internet Explorer, Netscape Navigator, Apple Safari, or Firefox.

The embedded Web server resides on the device. It is not loaded on a network server.

The embedded Web server provides an interface to the device that anyone who has a network-connected computer and a standard Web browser can use. No special software is installed or configured, but you must have a supported Web browser on your computer. To gain access to the embedded Web server, type the IP address for the device in the address line of the browser. (To find the IP address, print a configuration page. For more information about printing a configuration page, see Information pages on page 68.)

For a complete explanation of the features and functionality of the embedded Web server, see Embedded Web server on page 77.

HP ToolboxFX

HP ToolboxFX software is a program that you can use for the following tasks:

- Check the product status
- Check the supplies status and shop online for supplies
- Set up alerts
- View product usage reports
- View product documentation
- Gain access to troubleshooting and maintenance tools

HP ToolboxFX is supported for direct USB and network installations. You do not have to have Internet access to open and use HP ToolboxFX. HP ToolboxFX is only available following a Recommended install.

NOTE: HP ToolboxFX is not supported for Windows 2000, Windows Server 2003, or Macintosh operating systems. To use HP ToolboxFX, you must have TCP/IP protocol installed on your computer.

Supported operating systems	• Microsoft Windows XP, Service Pack 2 (Home and Professional editions) • Microsoft Windows Vista™

For more information about using HP ToolboxFX software, see Open HP ToolboxFX on page 69.

Other Windows components and utilities

- Software installer — automates the printing system installation
- Online Web registration
- Print Quality Optimizer Video
- HP Basic Color Match
- HP Easy Printer Care
- Web Printsmart
- HP Sure Supply
- HP Marketing Resource software

4 Use the product with Macintosh

- Software for Macintosh
- Use features in the Macintosh printer driver

Software for Macintosh

Supported operating systems for Macintosh

The device supports the following Macintosh operating systems:

- Mac OS X V10.2.8, V10.3, V10.4 and later

NOTE: For Mac OS V10.4 and later, PPC and Intel Core Processor Macs are supported.

Supported printer drivers for Macintosh

The HP installer provides PostScript® Printer Description (PPD) files and Printer Dialog Extensions (PDEs) for use with Macintosh computers.

The PPDs, in combination with the Apple PostScript printer drivers, provide access to device features. Use the Apple PostScript printer driver that comes with the computer.

Priority for print settings for Macintosh

Changes to print settings are prioritized depending on where the changes are made:

NOTE: The names of commands and dialog boxes might vary depending on your software program.

- **Page Setup dialog box**: Click **Page Setup** or a similar command on the **File** menu of the program you are working in to open this dialog box. Settings changed here might override settings changed anywhere else.
- **Print dialog box**: Click **Print**, **Print Setup**, or a similar command on the **File** menu of the program you are working in to open this dialog box. Settings changed in the **Print** dialog box have a lower priority and do *not* override changes made in the **Page Setup** dialog box.
- **Default printer driver settings**: The default printer driver settings determine the settings used in all print jobs, *unless* settings are changed in the **Page Setup**, **Print**, or **Printer Properties** dialog boxes.
- **Printer control panel settings**: Settings changed at the printer control panel have a lower priority than changes made anywhere else.

Change printer-driver settings for Macintosh

Change the settings for all print jobs until the software program is closed	Change the default settings for all print jobs	Change the product configuration settings
1. On the **File** menu, click **Print**.	1. On the **File** menu, click **Print**.	**Mac OS X V10.2.8**
2. Change the settings that you want on the various menus.	2. Change the settings that you want on the various menus.	1. In the Finder, on the **Go** menu, click **Applications**.
	3. On the **Presets** menu, click **Save as** and type a name for the preset.	2. Open **Utilities**, and then open **Print Center**.
	These settings are saved in the **Presets** menu. To use the new settings, you must select the saved preset option every time you open a program and print.	3. Click on the print queue.

Change the settings for all print jobs until the software program is closed	Change the default settings for all print jobs	Change the product configuration settings
		4. On the **Printers** menu, click **Configure**. 5. Click the **Installable Options** menu. **NOTE:** Configuration settings might not be available in Classic mode. **Mac OS X V10.3 or Mac OS X V10.4** 1. From the Apple menu, click **System Preferences** and then **Print & Fax**. 2. Click **Printer Setup**. 3. Click the **Installable Options** menu. **Mac OS X V10.5** 1. From the Apple menu, click **System Preferences** and then **Print & Fax**. 2. Click **Options & Supplies**. 3. Click the **Driver** menu. 4. Select the driver from the list, and configure the installed options.

Supported utilities for Macintosh

View embedded Web server using a Macintosh

The HP embedded Web server (EWS) is accessed by clicking the **Utility** button when viewing the print queue. This opens a Web browser, such as Safari, which allows the user to access the EWS. The EWS can also be accessed directly by typing the network IP address or DNS name of the product into the Web browser.

HP USB EWS Gateway software, which is automatically installed, also allows a Web browser to access the product if the product is connected using a USB cable. Click the **Utility** button when using a USB connection to access the EWS though the Web browser.

Use the EWS to perform the following tasks:

- View the device status and change device settings.
- View and change network settings for the device.
- Print information pages for the device.
- View the device event log.

Use features in the Macintosh printer driver

Create and use printing presets in Macintosh

Use printing presets to save the current printer driver settings for reuse.

Create a printing preset

1. On the **File** menu, click **Print**.
2. Select the driver.
3. Select the print settings.
4. In the **Presets** box, click **Save As...**, and type a name for the preset.
5. Click **OK**.

Use printing presets

1. On the **File** menu, click **Print**.
2. Select the driver.
3. In the **Presets** box, select the printing preset that you want to use.

NOTE: To use printer-driver default settings, select **Standard**.

Resize documents or print on a custom paper size

You can scale a document to fit on a different size of paper.

1. On the **File** menu, click **Print**.
2. Open the **Paper Handling** menu.
3. In the area for **Destination Paper Size**, select **Scale to fit paper size**, and then select the size from the drop-down list.
4. If you want to use only paper that is smaller than the document, select **Scale down only**.

Print a cover page

You can print a separate cover page for your document that includes a message (such as “Confidential”).

1. On the **File** menu, click **Print**.
2. Select the driver.
3. Open the **Cover Page** menu, and then select whether to print the cover page **Before Document** or **After Document**.
4. In the **Cover Page Type** menu, select the message that you want to print on the cover page.

NOTE: To print a blank cover page, select **Standard** as the **Cover Page Type**.

Use watermarks

A watermark is a notice, such as “Confidential,” that is printed in the background of each page of a document.

1. On the **File** menu, click **Print**.
2. Open the **Watermarks** menu.
3. Next to **Mode**, select the type of watermark to use. Select **Watermark** to print a semi-transparent message. Select **Overlay** to print a message that is not transparent.
4. Next to **Pages**, select whether to print the watermark on all pages or on the first page only.
5. Next to **Text**, select one of the standard messages, or select **Custom** and type a new message in the box.
6. Select options for the remaining settings.

Print multiple pages on one sheet of paper in Macintosh

You can print more than one page on a single sheet of paper. This feature provides a cost-effective way to print draft pages.

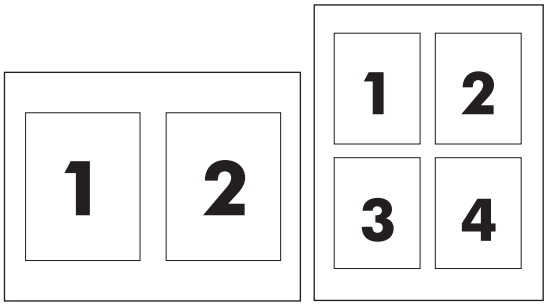

1. On the **File** menu, click **Print**.
2. Select the driver.
3. Open the **Layout** menu.
4. Next to **Pages per Sheet**, select the number of pages that you want to print on each sheet (1, 2, 4, 6, 9, or 16).
5. Next to **Layout Direction**, select the order and placement of the pages on the sheet.
6. Next to **Borders**, select the type of border to print around each page on the sheet.

Print on both sides of the page (duplex printing)

△ **CAUTION:** To avoid jams, do not load paper that is heavier than 105 g/m^2 (28-lb bond).

Use automatic duplex printing

1. Insert enough paper into one of the trays to accommodate the print job. If you are loading special paper such as letterhead, load it in one of the following ways:
   - For tray 1, load the letterhead paper face-up with the bottom edge feeding into the printer first.
   - For all other trays, load the letterhead paper face-down with the top edge at the back of the tray.
2. On the **File** menu, click **Print**.
3. Open the **Layout** menu.
4. Next to **Two-Sided**, select either **Long-Edge Binding** or **Short-Edge Binding**.
5. Click **Print**.

Print on both sides manually

1. Insert enough paper into one of the trays to accommodate the print job. If you are loading special paper such as letterhead, load it in one of the following ways:
   - For tray 1, load the letterhead paper face-up with the bottom edge feeding into the printer first.
   - For all other trays, load the letterhead paper face-down with the top edge at the back of the tray.
2. On the **File** menu, click **Print**.
3. On the **Finishing** menu, select **Manually Print on 2nd Side**.
4. Click **Print**. Follow the instructions in the pop-up window that appears on the computer screen before replacing the output stack in tray 1 for printing the second half.
5. Go to the printer, and remove any blank paper that is in tray 1.
6. Insert the printed stack face-up with the bottom edge feeding into the printer first in tray 1. You *must* print the second side from tray 1.
7. If prompted, press the appropriate control-panel button to continue.

Set the color options

Use the **Color Options** pop-up menu to control how colors are interpreted and printed from software programs.

1. Click **Show Advanced Options**.
2. Adjust the individual settings for text, graphics, and photographs.

Use the Services menu

If the product is connected to a network, use the **Services** menu to obtain product and supply-status information.

1. On the **File** menu, click **Print**.
2. Open the **Services** menu.

5 Connectivity

- Supported network operating systems
- USB connection
- Supported network protocols
- Configure the product on the network

Supported network operating systems

The following operating systems support network printing:

Full software installation

- Windows 2003 Server (64-bit)
- Windows XP (32-bit and 64-bit)
- Windows Vista (32-bit and 64-bit)
- Mac OS X V10.2.8, V10.3, V10.4 and later

Printer driver only

- Windows 2000
- Windows 2003 Server (32-bit)
- Linux (Web only)
- UNIX model scripts (Web only)

Printer sharing disclaimer

HP does not support peer-to-peer networking, as the feature is a function of Microsoft operating systems and not of the HP printer drivers. Go to Microsoft at www.microsoft.com.

USB connection

NOTE: Do *not* connect the USB cable before installing the software. The installation program will notify you when the USB cable should be connected.

This product supports a USB 2.0 connection. You must use an A-to-B type USB cable for printing.

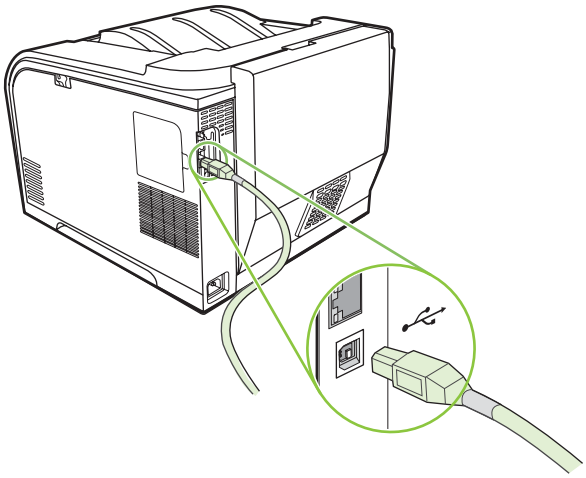

Supported network protocols

The product supports the TCP/IP network protocol. It is the most widely used and accepted networking protocol. Many networking services utilize this protocol. This product also supports IPv4 and IPv6. The following tables list the networking services/protocols that are supported on the product.

Table 5-1 Printing

Service name	Description
port9100 (Direct Mode)	Printing service
Line printer daemon (LPD)	Printing service
ws-print	Microsoft plug-and-play printing solution

Table 5-2 Network product discovery

Service name	Description
SLP (Service Location Protocol)	Device Discovery Protocol, used to help find and configure network devices. Used primarily by Microsoft-based software programs.
mDNS (multicast Domain Name Service - also known as “Rendezvous” or “Bonjour”)	Device Discovery Protocol, used to help find and configure network devices. Used primarily by Apple Macintosh-based software programs.
ws-discover	Used by Microsoft-based software programs

Table 5-3 Messaging and management

Service name	Description
HTTP (hypertext transfer protocol)	Allows Web browsers to communicate with embedded Web server.
EWS (embedded Web server)	Allows a user to manage the product through a Web browser.
SNMP (simple network management protocol)	Used by network programs for product management. SNMP V1 and standard MIB-II (Management Information Base) objects are supported.

Table 5-4 IP addressing

Service name	Description
DHCP (dynamic host configuration protocol), IPv4, and IPv6	For Automatic IP address assignment. DHCP server provides the product with an IP address. Generally requires no user intervention for product to obtain IP address from a DHCP server.

Table 5-4 IP addressing (continued)

Service name	Description
BOOTP (bootstrap protocol)	For Automatic IP address assignment. BOOTP server provides the product with an IP address. Requires administrator to input the product MAC hardware address on BOOTP server in order for product to obtain an IP address from that server.
Auto IP	For Automatic IP address assignment. If neither a DHCP server nor a BOOTP server is present, this service allows the product to generate a unique IP address.

Configure the product on the network

To configure network parameters on the product, use the product control panel, or the embedded Web server. For Windows operating systems, use the HP ToolboxFX software. For Mac OS X, use the **Utility** button.

Set up the product on the network

Hewlett-Packard recommends that you use the HP software installer on the product CD-ROM to set up printer drivers for networks.

NOTE: You *must* connect the printer to your network prior to starting the software installation.

This product supports a 10/100 network connection. Plug the network cable into the product and your network connection.

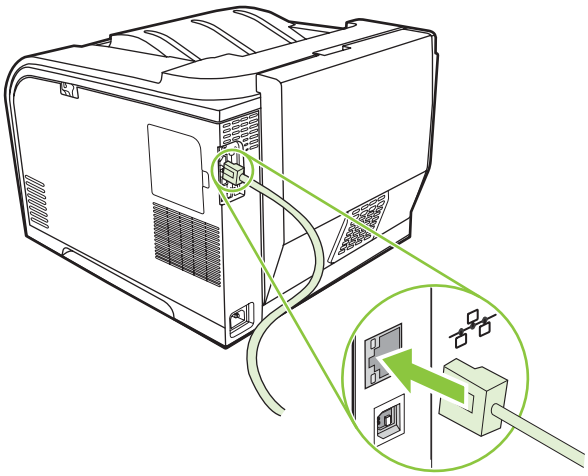

View settings

Network configuration page

The network configuration page lists the current settings and properties of the product network card. To print the network configuration page from the product, complete the following steps.

1. On the control panel, press OK.
2. Use the arrow buttons to select **Reports**, and then press OK.
3. Use the arrow buttons to select **Network report**, and then press OK.

Configuration page

The configuration page lists the current settings and properties of the product. To print the configuration page from the product, complete the following steps.

1. On the control panel, press OK.
2. Use the arrow buttons to select **Reports**, and then press OK.
3. Use the arrow buttons to select **Config report**, and then press OK.

IP address

You can configure the IP address manually or automatically via DHCP, BootP, or AutoP.

Manual configuration

1. On the control-panel menu, press OK.
2. Use the Left arrow (◄) or the Right arrow (►) button to select **Network config.**, and then press OK.
3. Use the Left arrow (◄) or the Right arrow (►) button to select **TCP/IP config**, and then press OK.
4. Use the Left arrow (◄) or the Right arrow (►) button to select **Manual**, and then press OK.
5. Press the Right arrow (►) button to increase the value for the first section of the IP address. Press the Left arrow (◄) button to decrease the value. When the value is correct, press OK. Repeat this process for the other three sections of the IP address.
6. If the address is correct, use the Left arrow (◄) or the Right arrow (►) button to select **Yes**, and then press OK. Repeat step 5 for the subnet mask and default gateway settings.

   -or-

   If the IP address is incorrect, use the Left arrow (◄) or the Right arrow (►) button to select **No**, and then press OK. Repeat step 5 to establish the correct IP address, and then repeat step 5 for the subnet mask and default gateway settings.

Automatic configuration

NOTE: Automatic is the default Network config. TCP/IP config setting.

1. On the control-panel menu, press OK.
2. Use the Left arrow (◄) or the Right arrow (►) button to select **Network config.**, and then press OK.
3. Use the Left arrow (◄) or the Right arrow (►) button to select **TCP/IP config**, and then press OK.
4. Use the Left arrow (◄) or the Right arrow (►) button to select **Automatic**, and then press OK.

   It might take several minutes before the automatic IP address is ready for use.

NOTE: To disable or enable specific automatic IP modes (such as BOOTP, DHCP, or AutoIP), use the embedded Web server or HP ToolboxFX.

Show or hide the IP address on the control panel

NOTE: When **Show IP address** is **On**, the IP address will alternately appear on the control-panel display with the print-cartridge-status gauges.

1. On the control-panel menu, press OK.
2. Use the Left arrow (◄) or the Right arrow (►) button to select **Network config.**, and then press OK.
3. Use the Left arrow (◄) or the Right arrow (►) button to select **Show IP address**, and then press OK.
4. Use the Left arrow (◄) or the Right arrow (►) button to select **Yes** or **No**, and then press OK.

Set automatic crossover

1. On the control-panel menu, press OK.
2. Use the Left arrow (◄) or the Right arrow (►) button to select **Network config.**, and then press OK.
3. Use the Left arrow (◄) or the Right arrow (►) button to select **Automatic crossover**, and then press OK.
4. Use the Left arrow (◄) or the Right arrow (►) button to select **On** or **Off**, and then press OK.

Set network services

1. On the control-panel menu, press OK.
2. Use the Left arrow (◄) or the Right arrow (►) button to select **Network config.**, and then press OK.
3. Use the Left arrow (◄) or the Right arrow (►) button to select **Network services**, and then press OK.
4. Use the Left arrow (◄) or the Right arrow (►) button to select **IPv4** or **IPv6**, and then press OK.
5. Use the Left arrow (◄) or the Right arrow (►) button to select **On** or **Off**, and then press OK.

Restore defaults (network settings)

1. On the control-panel menu, press OK.
2. Use the Left arrow (◄) or the Right arrow (►) button to select **Network config.**, and then press OK.
3. Use the Left arrow (◄) or the Right arrow (►) button to select **Restore defaults**, and then press OK.
4. Press OK to restore the factory network default settings. Press X to exit the menu without restoring the factory network default settings.

TCP/IP

Similar to a common language that people use to communicate with each other, TCP/IP (Transmission Control Protocol/Internet Protocol) is a suite of protocols designed to define the way computers and other devices communicate with each other over a network.

IP address

Every host (workstation or node) on an IP network requires a unique IP address for each network interface. This address is a software address that is used to identify both the network and specific hosts that are located on that network. It is possible for a host to query a server for a dynamic IP address each time the device boots up (for example, using DHCP and BOOTP).

An IPv4 address contains four bytes of information, divided into sections that each contain one byte. The IP address has the following format:

`xxx.xxx.xxx.xxx`

NOTE: When assigning IP addresses, always consult the IP address administrator. Setting the wrong address can disable other equipment operating on the network or interfere with communications.

Configure IP parameters

IP configuration parameters can be configured manually, or they can be automatically downloaded by using DHCP or BOOTP each time the product is turned on.

When turned on, a new product that is unable to retrieve a valid IP address from the network automatically assigns itself a default IP address. On a small private network, a unique IP address in the range of 169.254.1.0 to 169.254.254.255 is assigned. The IP address for the product is listed on the product Configuration page and the Network report. See Control-panel menus on page 9.

Dynamic Host Configuration Protocol (DHCP)

DHCP allows a group of devices to use a set of IP addresses that are maintained by a DHCP server. The device sends a request to the server, and if an IP address is available, the server assigns it to that device.

BOOTP

BOOTP is a bootstrap protocol used to download configuration parameters and host information from a network server.

The client broadcasts a boot request packet that contains the product hardware address. The server answers with a boot reply packet that contains the information that the device needs for configuration.

Subnets

When an IP network address for a particular network class is assigned to an organization, no provision is made for more than one network being present at that location. Local network administrators use subnets to partition a network into several different subnetworks. Splitting a network into subnets can result in better performance and improved use of limited network address space.

Subnet mask

The subnet mask is a mechanism used to divide a single IP network into several different subnetworks. For a given network class, a portion of an IP address that would normally be used to identify a node is used, instead, to identify a subnetwork. A subnet mask is applied to each IP address to specify the portion used for subnetworks, and the portion used to identify the node.

Gateways

Gateways (routers) are used to connect networks together. Gateways are devices that act as translators between systems that do not use the same communication protocols, data formatting, structures, languages, or architectures. Gateways repackage the data packets and change the syntax to match that of the destination system. When networks are divided into subnets, gateways are required to connect one subnet to another.

Default gateway

The default gateway is the IP address of the gateway or router that moves packets between networks.

If multiple gateways or routers exist, then the default gateway is typically the address of the first, or nearest, gateway or router. If no gateways or routers exist, then the default gateway will typically assume the IP address of the network node (such as the workstation or product).

6 Paper and print media

- Understand paper and print media use
- Supported paper and print media sizes
- Supported paper types and tray capacity
- Special paper or print media guidelines
- Load paper and print media

Understand paper and print media use

This product supports a variety of paper and other print media in accordance with the guidelines in this user guide. Paper or print media that does not meet these guidelines might cause the following problems:

- Poor print quality
- Increased jams
- Premature wear on the product, requiring repair

For best results, use only HP-brand paper and print media designed for laser printers or multiuse. Do not use paper or print media made for inkjet printers. Hewlett-Packard Company cannot recommend the use of other brands of media because HP cannot control their quality.

It is possible for paper to meet all of the guidelines in this user guide and still not produce satisfactory results. This might be the result of improper handling, unacceptable temperature and/or humidity levels, or other variables over which Hewlett-Packard has no control.

△ **CAUTION:** Using paper or print media that does not meet Hewlett-Packard's specifications might cause problems for the product, requiring repair. This repair is not covered by the Hewlett-Packard warranty or service agreements.

Supported paper and print media sizes

This product supports a number of paper sizes, and it adapts to various media.

NOTE: To obtain best print results, select the appropriate paper size and type in your print driver before printing.

Table 6-1 Supported paper and print media sizes

Size	Dimensions	Tray 1	Tray 2 or optional tray 3
Letter	216 x 279 mm (8.5 x 11 inches)	✓	✓
Legal	216 x 356 mm (8.5 x 14 inches)	✓	✓
A4	210 x 297 mm (8.27 x 11.69 inches)	✓	✓
Executive	184 x 267 mm (7.24 x 10.51 inches)	✓	✓
A3	297 x 420 mm (11.69 x 16.54 inches)		
A5	148 x 210 mm (5.83 x 8.27 inches)	✓	✓
A6	105 x 148 mm (4.13 x 5.83 inches)	✓	✓
B4 (JIS)	257 x 364 mm (10.12 x 14.33 inches)		
B5 (JIS)	182 x 257 mm (7.17 x 10.12 inches)	✓	✓
B5 (ISO)	176 x 250 mm (6.93 x 9.84 inches)		
B6 (ISO)	125 x 176 mm (4.92 x 6.93 inches)		
16k	184 x 260 mm (7.24 x 10.23 inches) 195 x 270 mm (7.68 x 10.62 inches) 197 x 273 mm (7.75 x 10.75 inches)	✓	✓
8.5 x 13	216 x 330 mm (8.5 x 13 inches)	✓	✓
4 x 6	107 x 152 mm (4 x 6 inches)	✓	✓
5 x 8	127 x 203 mm (5 x 8 inches)	✓	✓
10 x 15 cm	100 x 150 mm (3.9 x 5.9 inches)	✓	✓
Custom	(76 - 216) x (127 - 356) mm ((3 - 8.5) x (5 - 14) inches)	✓	
Custom	(102 - 216) x (153 - 356) mm ((4 - 8.5) x (6 - 14) inches)		✓

Table 6-2 Supported envelopes and postcards

Size	Dimensions	Tray 1	Tray 2
Envelope #10	105 x 241 mm (4.13 x 9.49 inches)	✓	✓

Table 6-2 Supported envelopes and postcards (continued)

Size	Dimensions	Tray 1	Tray 2
Envelope DL	110 x 220 mm (4.33 x 8.66 inches)	✓	✓
Envelope C5	162 x 229 mm (6.93 x 9.84 inches)	✓	✓
Envelope B5	176 x 250 mm (6.7 x 9.8 inches)	✓	✓
Envelope Monarch	98 x 191 mm (3.9 x 7.5 inches)	✓	✓
Postcard	100 x 148 mm (3.94 x 5.83 inches)	✓	✓
Double postcard	148 x 200 mm (5.83 x 7.87 inches)	✓	✓

Supported paper types and tray capacity

Table 6-3 Tray 1

Media type	Weight	Capacity[1]	Paper orientation
Every day: • Plain • Light • Bond • Recycled	60 to 90 g/m^2 (16 to 24 lb)	Up to 50 sheets	Side to be printed on face-up, with the top edge at the back of the tray
Presentation: • Matte paper, mid-weight to heavy • Glossy paper, mid-weight to heavy	Up to 176 g/m^2 (47 lb)[2]	Up to 5 mm (0.2 inches) stack height	Side to be printed on face-up, with the top edge at the back of the tray
Brochure: • Matte paper, mid-weight to heavy • Glossy paper, mid-weight to heavy	Up to 176 g/m^2 (47 lb)[2]	Up to 5 mm (0.2 inches) stack height	Side to be printed on face-up, with the top edge at the back of the tray
Photo/cover • Matte cover paper • Glossy cover paper • Matte photo paper • Glossy photo paper • Cardstock	Up to 176 g/m^2 (47 lb)[2]	Up to 5 mm (0.2 inches) stack height	Side to be printed on face-up, with the top edge at the back of the tray
Other: • Color laser transparency • Labels • Letterhead, envelope • Heavy envelope • Preprinted • Prepunched • Colored • Rough • Tough		Up to 50 sheets, or 10 envelopes	Side to be printed on face-up, with the top edge at the back of the tray or the stamp-end at the back of the tray

1 Capacity can vary depending on media weight and thickness, and environmental conditions.

2 The device supports up to 220 g/m^2 (59 lb) for glossy and glossy photo paper.

Table 6-4 Tray 2 and Tray 3

Media type	Weight	Capacity[1]	Paper orientation
Every day: • Plain • Light • Bond • Recycled	60 to 90 g/m^2 (16 to 24 lb)	Up to 250 sheets	Side to be printed on face-up, with the top edge at the back of the tray
Presentation: • Matte paper, mid-weight to heavy • Glossy paper, mid-weight to heavy	Up to 176 g/m^2 (47 lb)[2]	Up to 12.5 mm (0.5 inches) stack height	Side to be printed on face-up, with the top edge at the back of the tray
Brochure: • Matte paper, mid-weight to heavy • Glossy paper, mid-weight to heavy	Up to 176 g/m^2 (47 lb)[2]	Up to 12.5 mm (0.5 inches) stack height	Side to be printed on face-up, with the top edge at the back of the tray
Photo/cover • Matte cover paper • Glossy cover paper • Matte photo paper • Glossy photo paper • Cardstock	Up to 176 g/m^2 (47 lb)[2]	Up to 12.5 mm (0.5 inches) stack height	Side to be printed on face-up, with the top edge at the back of the tray
Other: • Color laser transparency • Labels • Letterhead, envelope • Heavy envelope • Preprinted • Prepunched • Colored • Rough • Tough		Up to 50 sheets, or 10 envelopes	Side to be printed on face-up, with the top edge at the back of the tray or the stamp-end at the back of the tray

1 Capacity can vary depending on media weight and thickness, and environmental conditions.

2 The device supports up to 220 g/m^2 (59 lb) for glossy and glossy photo paper.

Special paper or print media guidelines

This product supports printing on special media. Use the following guidelines to obtain satisfactory results. When using special paper or print media, be sure to set the type and size in your print driver to obtain the best print results.

△ **CAUTION:** HP LaserJet printers use fusers to bond dry toner particles to the paper in very precise dots. HP laser paper is designed to withstand this extreme heat. Using inkjet paper not designed for this technology could damage your printer.

Media type	Do	Do not
Envelopes	• Store envelopes flat. • Use envelopes where the seam extends all the way to the corner of the envelope. • Use peel-off adhesive strips that are approved for use in laser printers.	• Do not use envelopes that are wrinkled, nicked, stuck together, or otherwise damaged. • Do not use envelopes that have clasps, snaps, windows, or coated linings. • Do not use self-stick adhesives or other synthetic materials.
Labels	• Use only labels that have no exposed backing between them. • Use Labels that lie flat. • Use only full sheets of labels.	• Do not use labels that have wrinkles or bubbles, or are damaged. • Do not print partial sheets of labels.
Transparencies	• Use only transparencies that are approved for use in laser printers. • Place transparencies on a flat surface after removing them from the product.	• Do not use transparent print media not approved for laser printers.
Letterhead or preprinted forms	• Use only letterhead or forms approved for use in laser printers.	• Do not use raised or metallic letterhead.
Heavy paper	• Use only heavy paper that is approved for use in laser printers and meets the weight specifications for this product.	• Do not use paper that is heavier than the recommended media specification for this product unless it is HP paper that has been approved for use in this product.
Glossy or coated paper	• Use only glossy or coated paper that is approved for use in laser printers.	• Do not use glossy or coated paper designed for use in inkjet products.

Load paper and print media

Load tray 1

1. Open tray 1.

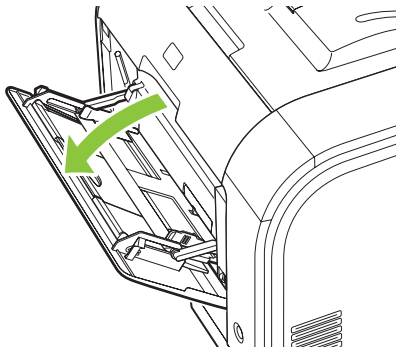

2. If loading long sheets of media, pull out the extension tray.

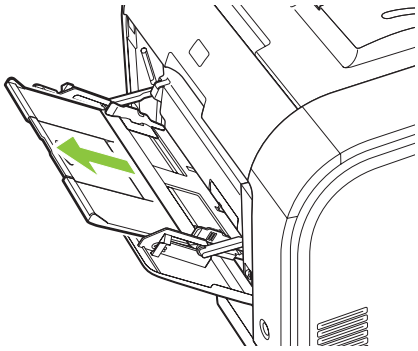

3. If necessary, flip out the extension.

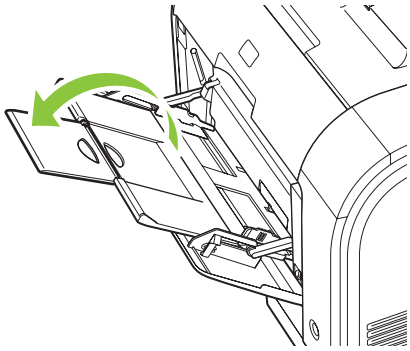

4. Extend the paper guides fully (callout 1) and then load the media stack into tray 1 (callout 2). Adjust the paper guides to the size of the paper.

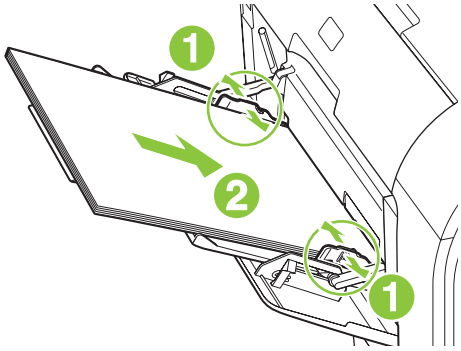

NOTE: Place the media into tray 1 with the side to be printed on face-up and the top toward the product.

Load tray 2 or 3

1. Pull the tray out of the product.

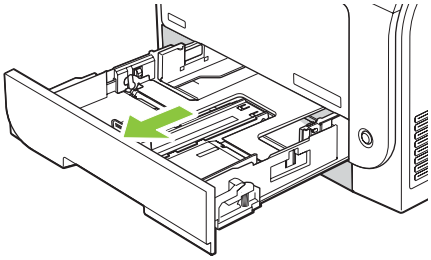

2. Slide open the paper length and width guides.

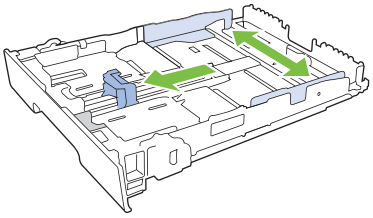

- To load Legal-size paper, extend the tray by pressing and holding the extension tab while pulling the front of the tray toward you.

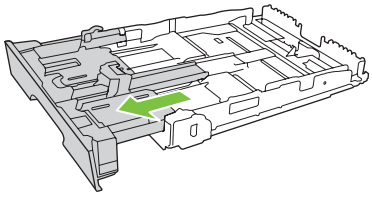

NOTE: When it is loaded with Legal-size paper, the tray extends from the front of the product approximately 64 mm (2.5 inches).

3. Place the paper in the tray and make sure that it is flat at all four corners. Slide the paper length and width guides so that they are against the stack of paper.

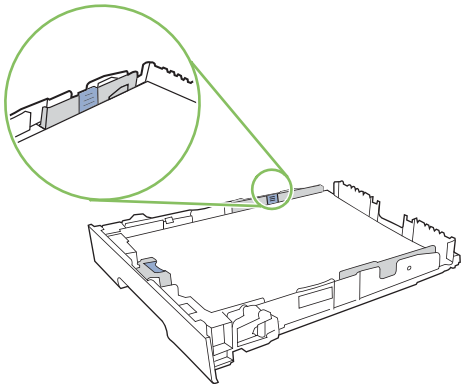

4. Push down on the paper to make sure that the paper stack is below the paper limit tabs on the side of the tray.

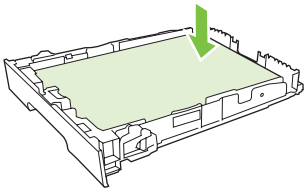

5. Slide the tray into the product.

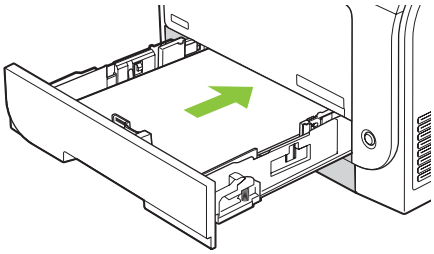

7 Print tasks

- Cancel a print job
- Use features in the Windows printer driver

Cancel a print job

You can stop a print request by using the product control panel or using your software program. For instructions on how to stop a print request from a computer on a network, see the online Help for the specific network software.

NOTE: It can take some time for all printing to clear after you have canceled a print job.

Cancel the current print job at the product control panel

Press the Cancel Job (X) button on the control panel.

NOTE: If the print job has proceeded too far, you might not have the option to cancel it.

Cancel the current print job from the software program

A dialog box might appear briefly on the screen, giving you the option to cancel the print job.

If several requests have been sent to the product through your software, they might be waiting in a print queue (for example, in Windows Print Manager). See the software documentation for specific instructions about canceling a print request from the computer.

If a print job is waiting in a print queue (computer memory) or print spooler (Windows 2000, XP, or Vista), delete the print job there.

For Windows 2000, Windows XP, or Windows Vista, click **Start** and then click **Printers and Faxes**; or click **Start**, click **Control Panel**, and then click **Printers and Faxes**. Double-click the printer icon to open the print spooler. Select the print job that you want to cancel, and then press Cancel or Delete under the **Document** menu. If the print job is not canceled, you might need to shut down and restart the computer.

Use features in the Windows printer driver

Open the printer driver

How do I	Steps to perform
Open the printer driver	On the **File** menu in the software program, click **Print**. Select the printer, and then click **Properties** or **Preferences**.
Get help for any printing option	Click the **?** symbol in the upper-right corner of the printer driver, and then click any item in the printer driver. A pop-up message displays that provides information about the item. Or, click **Help** to open the online Help.

Use printing shortcuts

To perform the following tasks, open the printer driver and click the **Printing Shortcuts** tab.

NOTE: In previous HP printer drivers, this feature was called **Quick Sets**.

How do I	Steps to perform
Use a printing shortcut	Select one of the shortcuts, and then click **OK** to print the job with the predefined settings.
Create a custom printing shortcut	a) Select an existing shortcut as a base. b) Select the print options for the new shortcut. c) Click **Save As**, type a name for the shortcut, and click **OK**.

Set paper and quality options

To perform the following tasks, open the printer driver and click the **Paper/Quality** tab.

How do I	Steps to perform
Select a page size	Select a size from the **Paper size** drop-down list.
Select a custom page size	a) Click **Custom**. The **Custom Paper Size** dialog box opens. b) Type a name for the custom size, specify the dimensions, and click **OK**.
Select a paper source	Select a tray from the **Paper source** drop-down list.
Select a paper type	Select a type from the **Paper type** drop-down list.
Print covers on different paper Print the first or last page on different paper	a) In the **Special pages** area, click **Covers** or **Print pages on different paper**, and then click **Settings**. b) Select an option to print a blank or preprinted front cover, back cover, or both. Or, select an option to print the first or last page on different paper. c) Select options from the **Paper source** and **Paper type** drop-down lists, and then click **Add**. d) Click **OK**.

Set document effects

To perform the following tasks, open the printer driver and click the **Effects** tab.

How do I	Steps to perform
Scale a page to fit on a selected paper size	Click **Print document on**, and then select a size from the drop-down list.
Scale a page to be a percent of the actual size	Click **% of actual size**, and then type the percent or adjust the slider bar.
Print a watermark	a) Select a watermark from the **Watermarks** drop-down list. b) To print the watermark on the first page only, click **First page only**. Otherwise, the watermark is printed on each page.
Add or edit watermarks **NOTE:** The printer driver must be stored on your computer for this to work.	a) In the **Watermarks** area, click **Edit**. The **Watermark Details** dialog box opens. b) Specify the settings for the watermark, and then click **OK**.

Set document finishing options

To perform the following tasks, open the printer driver and click the **Finishing** tab.

How do I	Steps to perform
Print on both sides (Duplex)	Click **Print on both sides**. If you will bind the document along the top edge, click **Flip pages up**.
Print a booklet	a) Click **Print on both sides**. b) In the **Booklet layout** drop-down list, click **Left binding** or **Right binding**. The **Pages per sheet** option automatically changes to **2 pages per sheet**.
Print multiple pages per sheet	a) Select the number of pages per sheet from the **Pages per sheet** drop-down list. b) Select the correct options for **Print page borders**, **Page order**, and **Orientation**.
Select page orientation	a) In the **Orientation** area, click **Portrait** or **Landscape**. b) To print the page image upside down, click **Rotate by 180 degrees**.

Obtain support and product-status information

To perform the following tasks, open the printer driver and click the **Services** tab.

How do I	Steps to perform
Obtain support information for the product and order supplies online	In the **Internet Services** drop-down list, select a support option, and click **Go!**
Check the status of the product, including the level of supplies	Click the **Device and Supplies Status** icon. The **Device Status** page of the HP embedded Web server opens.

Set advanced printing options

To perform the following tasks, open the printer driver and click the **Advanced** tab.

How do I	Steps to perform
Select advanced printing options	In any of the sections, click a current setting to activate a drop-down list so you can change the setting.
Change the number of copies that are printed **NOTE:** If the software program that you are using does not provide a way to print a particular number of copies, you can change the number of copies in the driver. Changing this setting affects the number of copies for all print jobs. After your job has printed, restore this setting to the original value.	Open the **Paper/Output** section, and then enter the number of copies to print. If you select 2 or more copies, you can select the option to collate the pages.
Print colored text as black rather than as shades of gray	a) Open the **Document Options** section, and then open the **Printer Features** section. b) In the **Print All Text as Black** drop-down list, select **Enabled**.
Load letterhead or preprinted paper the same way for every job, whether printing on one or both sides of the page	a) Open the **Document Options** section, and then open the **Printer Features** section. b) In the **Alternative Letterhead Mode** drop-down list, select **On**. c) At the product, load the paper the same way you would for printing on both sides.
Change the order in which pages are printed	a) Open the **Document Options** section, and then open the **Layout Options** section. b) In the **Page Order** drop-down list, select **Front to Back** to print the pages in the same order as they are in the document, or select **Back to Front** to print the pages in the reverse order.

8 Color for Windows

- Manage color
- Match colors
- Advanced color use

Manage color

Manage color by changing the settings on the Color tab in the printer driver.

Automatic

Setting color options to **Automatic** typically produces the best possible print quality for color documents. The **Automatic** color adjustment option optimizes the neutral-gray color treatment, halftones, and edge enhancements for each element in a document. For more information, see your printer driver online Help.

NOTE: **Automatic** is the default setting and is recommended for printing all color documents.

Print in Grayscale

Select the **Print in Grayscale** option from the printer driver to print a color document in black and white. This option is useful for printing color documents that will be photocopied or faxed.

When **Print in Grayscale** is selected, the product uses the monochrome mode, which reduces use of the color cartridges.

Manual color adjustment

Use the **Manual** color adjustment option to adjust the neutral-gray color treatment, halftones, and edge enhancements for text, graphics, and photographs. To gain access to the manual color options, from the **Color** tab, select **Manual**, and then select **Settings**.

Manual color options

Use manual color options to adjust the **Neutral Grays**, **Halftone**, and **Edge Control** options for text, graphics, and photographs.

Table 8-1 Manual color options

Setting description	Setting options
Halftone **Halftone** options affect the color output resolution and clarity.	• **Smooth** provides better results for large, solid-filled print areas and enhances photographs by smoothing color gradations. Select this option when uniform and smooth area fills are the top priority. • **Detail** is useful for text and graphics that require sharp distinctions among lines or colors, or images that contain a pattern or a high level of detail. Select this option when sharp edges and details are the top priority.

Table 8-1 Manual color options (continued)

Setting description	Setting options
Neutral Grays The **Neutral Grays** setting determines the method for creating gray colors used in text, graphics, and photographs.	• **Black Only** generates neutral colors (grays and black) by using only black toner. This guarantees neutral colors without a color cast. This setting is best for documents and grayscale viewgraphs. • **4-Color** generates neutral colors (grays and black) by combining all four toner colors. This method produces smoother gradients and transitions to other colors, and it produces the darkest black.
Edge Control The **Edge Control** setting determines how edges are rendered. Edge control has two components: adaptive halftoning and trapping. Adaptive halftoning increases edge sharpness. Trapping reduces the effect of color-plane misregistration by overlapping the edges of adjacent objects slightly.	• **Maximum** is the most aggressive trapping setting. Adaptive halftoning is on. • **Normal** sets trapping at a medium level. Adaptive halftoning is on. • **Light** sets trapping at a minimal level, Adaptive halftoning is on. • **Off** turns off both trapping and adaptive halftoning.

Color themes

Use color themes to adjust the **RGB Color** options for the entire page.

Setting description	Setting options
RGB Color	• **Default (sRGB)** instructs the product to interpret RGB color as sRGB. The sRGB standard is the accepted standard of Microsoft and the World Wide Web Consortium (http://www.w3.org). • **Vivid** instructs the product to increase the color saturation in the midtones. Less colorful objects are rendered more colorfully. This setting is recommended for printing business graphics. • **Photo** interprets RGB color as if it were printed as a photograph using a digital mini-lab. It renders deeper, more saturated colors differently than Default (sRGB) mode. Use this setting for printing photos. • **Photo (AdobeRGB 1998)** is for digital photos that use the AdobeRGB color space rather than sRGB. When printing from a professional software program that uses AdobeRGB, it is important to turn off the color management in the software program and allow the product to manage the color space. • **None** sets the printer to print RGB data in raw device mode. To render photographs correctly when this option is selected, you must manage color in the program in which you are working or in the operating system.

Match colors

For most users, the best method for matching colors is to print sRGB colors.

The process of matching printer output color to your computer screen is complex, because printers and computer monitors use different methods of producing color. Monitors *display* colors by using light pixels that use an RGB (red, green, blue) color process, but printers *print* colors by using a CMYK (cyan, magenta, yellow, and black) process.

Several factors can influence your ability to match printed colors to those on your monitor:

- Print media
- Printer colorants (inks or toners, for example)
- Printing process (inkjet, press, or laser technology, for example)
- Overhead lighting
- Personal differences in perception of color
- Software programs
- Printer drivers
- Computer operating systems
- Monitors
- Video cards and drivers
- Operating environment (humidity, for example)

Keep these factors in mind when colors on your screen do not perfectly match your printed colors.

Match colors using the Microsoft Office Basic Colors palette

You can use HP ToolboxFX to print a palette of the Microsoft Office Basic Colors. Use this palette to select the colors that you want to use in printed documents. It shows the actual colors that print when you select these basic colors in a Microsoft Office program.

1. In HP ToolboxFX, select the **Help** folder.
2. In the **Color Printing Tools** section, select **Print Basic Colors**.
3. Adjust color in your document to match the color selection on the printed color palette.

Match colors using the HP Basic Color Match tool

The HP Basic Color Match tool allows you to adjust spot color in your printed output. For example, you can match the color of your company logo on your printed output. You can save and use the new color schemes for specific documents or all printed documents, or you can create multiple color schemes that you can choose from later.

This software tool is available to all users of this product. Before you can use the tool, you must download it from the Web through HP ToolboxFX or the software CD that came with your product.

Use the following procedure to download the HP Basic Color Match tool through the software CD.

1. Insert the CD into your CD-ROM drive. The CD autoruns.
2. Select **Install more software**.
3. Select **HP Basic Color Match**. The tool downloads and installs itself. A desktop icon is also created.

Use the following procedure to download the HP Basic Color Match tool through HP ToolboxFX.

1. Open HP ToolboxFX.
2. Select the **Help** folder.
3. In the **Color Printing Tools** section, select **Basic Color Match**. The tool downloads and installs itself. A desktop icon is also created.

After the HP Basic Color Match tool is downloaded and installed, it can be run from the desktop icon or from HP ToolboxFX (click the **Help** folder, and then **Color Printing Tools**, and then **Basic Color Match**). The tool guides you through selecting colors. All color matches selected are saved as a color theme and can be accessed in the future.

Match colors using View Custom Colors

You can use HP ToolboxFX to print a palette of custom colors. In the **Toolbox Color Printing Tools** section, click **View Custom Colors**. Tab to the color page desired and print the current page. In your document, type the red, green, and blue values in the software's custom color menu to change them to match the color on the palette.

Advanced color use

The product provides automatic color features that generate excellent color results. Carefully designed and tested color tables provide smooth, accurate color rendition of all printable colors.

The product also provides sophisticated tools for the experienced professional.

HP ColorSphere toner

HP designs the print system (printer, print cartridges, toner, and paper) to work together to optimize print quality, product reliability, and user productivity. Original HP print cartridges contain HP ColorSphere toner that is specifically matched to your printer so that it will produce a wide range of brilliant colors. This helps you create professional looking documents that contain sharp, clear text and graphics and realistic printed photos.

HP ColorSphere toner produces print-quality consistency and intensity you can depend on across a wide range of papers That means you can produce documents that help you make the right impression. Plus, HP professional-quality everyday and specialty papers (including a wide variety of HP media types and weights) are designed for the way you work.

HP ImageREt 3600

ImageREt 3600 provides 3600 dots-per-inch (dpi) color laser-class quality through a multi-level printing process. This process precisely controls color by combining up to four colors within a single dot and by varying the amount of toner in a given area. ImageREt 3600 has been improved for this product. The improvements offer trapping technologies, greater control over dot placement, and more precise control of toner quality in a dot. These new technologies, coupled with HP's multi-level printing process, result in a 600 x 600 dpi printer that provides 3600-dpi color laser-class quality with millions of smooth colors.

Media selection

For the best color and image quality, select the appropriate media type from the software printer menu or from the printer driver.

Color options

Color options automatically provide optimal color output. These options use object tagging, which provides optimal color and halftone settings for different objects (text, graphics, and photos) on a page. The printer driver determines which objects appear on a page and uses halftone and color settings that provide the best print quality for each object.

In the Windows environment, the **Automatic** and **Manual** color options are on the **Color** tab in the printer driver.

Standard red-green-blue (sRGB)

Standard red-green-blue (sRGB) is a worldwide color standard that HP and Microsoft developed as a common color language for monitors, input devices (scanners and digital cameras), and output devices (printers and plotters). It is the default color space used for HP products, Microsoft operating systems, the World Wide Web, and most office software. The sRGB standard represents the typical Windows monitor and is the convergence standard for high-definition television.

NOTE: Factors such as the type of monitor you use and the room lighting can affect the appearance of colors on your screen. For more information, see Match colors on page 62.

The latest versions of Adobe PhotoShop®, CorelDRAW®, Microsoft Office, and many other programs use sRGB to communicate color. Because it is the default color space in Microsoft operating systems, sRGB has been adopted broadly. When programs and devices use sRGB to exchange color information, typical users experience greatly improved color matching.

The sRGB standard improves your ability to match colors between the product, the computer monitor, and other input devices automatically, and eliminates the need to become a color expert.

9 Manage and maintain

- Information pages
- HP ToolboxFX
- Embedded Web server
- Manage supplies
- Replace print cartridges
- Memory and font DIMMs
- Clean the product
- Firmware updates

Information pages

Use the control panel to print information pages that give details about the product and its current settings.

1. Press OK to open the menus.
2. Press the Left arrow (◄) or Right arrow (►) button to navigate to **Reports**, and then press OK.
3. Press the Left arrow (◄) or Right arrow (►) button to navigate through the reports, and then press OK to print a report.
4. Press X to exit the menus.

The following information pages are available:

- Demo page
- Menu structure
- Configuration page
- Supplies status page
- Network configuration page
- Usage report
- PCL font list
- PS font list
- PCL6 font list
- Color usage report
- Service report
- Diagnostics report

HP ToolboxFX

Open HP ToolboxFX

Open HP ToolboxFX in one of these ways:

- In the Windows system tray, double-click the HP ToolboxFX icon ( ).
- On the Windows **Start** menu, click **Programs** (or **All Programs** in Windows XP and Vista), click **HP**, click **HP Color LaserJet CP2020 Series**, and then click **HP ToolboxFX**.

HP ToolboxFX contains the following folders:

- Status on page 70
- Alerts on page 71
- Product information on page 71
- Help on page 72
- Device Settings on page 73
- Network Settings on page 76

Status

The **Status** folder contains links to the following main pages:

- **Device status**. This page indicates product conditions such as a jam or an empty tray. After you correct a problem, click **Refresh status** to update the product status.
- **Supplies status**. View details such as the approximate percent of toner remaining in the print cartridge and the number of pages that have been printed with the current print cartridge. This page also has links for ordering supplies and for finding recycling information.
- **Device configuration**. View a detailed description of the current product configuration, including the amount of memory installed and whether optional trays are installed.
- **Network summary**. View a detailed description of the current network configuration, including the IP address and network status.
- **Print info pages**. Print the Configuration page and other information pages, such as the Supplies status page. See Information pages on page 68.
- **Color usage job log**. View color usage information for recently printed documents.
- **Event log**. View a history of product events. The most recent event is listed first.

Event log

The Event log is a table that contains codes corresponding to error messages that have appeared on the product control-panel display, a brief description of each error, and the number of pages that printed when each error occurred. For more information about error messages, see Control-panel and status-alert messages on page 95.

Alerts

The **Alerts** folder contains links to the following main pages:

- **Set up Status Alerts**. Set up the product to send you pop-up alerts for certain events, such as low levels of cartridge life.
- **Set up E-mail Alerts**. Set up the product to send you e-mail alerts for certain events, such as low levels of cartridge life.

Set up Status Alerts

Use this to set up the product so that it sends alerts to your computer when jams, low levels of toner in HP print cartridges, a non-HP print cartridge in use, empty input trays, and specific error messages occur.

Select to receive a pop-up, a system tray icon, a desktop alert, or any combination of these. The pop-up and desktop alerts only appear when the product is printing from the computer on which you set up the alerts. Desktop alerts are only visible momentarily, and disappear automatically.

Change the **Cartridge low threshold** setting, which sets the toner level that causes a low toner alert, on the **System setup** page.

NOTE: You must click **Apply** before your changes take effect.

Set up E-mail Alerts

Use this to configure up to two e-mail addresses to receive alerts when certain events occur. You can specify different events for each e-mail address. Use the information for the e-mail server that will send out the e-mail alert messages for the product.

NOTE: You can only configure e-mail alerts to be sent from a server that does not require user authentication. If your e-mail server requires you to log in with a username and password, you cannot enable e-mail alerts.

NOTE: You must click **Apply** before your changes take effect.

Product information

The **Product information** folder contains links to the following page:

- **Demonstration Pages**. Print pages that show the color print quality potential and overall print characteristics of the product.

Set password

Use HP ToolboxFX or the embedded Web server to set a system password.

1. In the embedded Web server, click the **Settings** tab.

   In HP ToolboxFX, click the **Device Settings** tab.

   NOTE: If a password has already been set, you are prompted for it. Type the password, and then click **Apply**.

2. Click **Password**.

3. In the **Password** box, type the password that you want to set, and then in the **Confirm password** box, type the same password again to confirm your choice.

4. Click **Apply** to save the password.

Help

The **Help** folder contains links to the following main pages:

- **Troubleshooting**. View troubleshooting help topics, print troubleshooting pages, clean the product, and open Microsoft Office Basic Colors. For more information about Microsoft Office Basic Colors, see Match colors on page 62.
- **Paper and Print Media**. Print information about how to obtain optimal results from your product using various types of paper and print media.
- **Color Printing Tools**. Open Microsoft Office Basic Colors or the full palette of color with associated RGB values. For more information about Microsoft Office Basic Colors, see Match colors on page 62. Use the HP Basic Color Match to adjust spot colors in your printed output.
- **Animated Demonstrations**. View animations that demonstrate how to perform common tasks on your device, such as how to get the best print quality, how to remove paper jams, and how to replace a print cartridge.
- **User Guide**. View information about the product usage, warranty, specifications, and support. The User Guide is available in both HTML and PDF format.

Device Settings

The **Device Settings** folder contains links to the following main pages:

- **Device Information**. View information such as the product description and a contact person.
- **Paper Handling**. Configure trays or change the product paper-handling settings, such as default paper size and default paper type.
- **Printing**. Change the default product print settings, such as number of copies and paper orientation.
- **PCL5c**. Change the PCL settings.
- **PostScript**. Change the PS settings.
- **Print Quality**. Change the print-quality settings.
- **Print Density**. Change the print-density settings, such as contrast, highlights, midtones, and shadows.
- **Paper Types**. Change the mode settings for each media type, such as letterhead, prepunched, or glossy paper.
- **System Setup**. Change the system settings, such as jam recovery and auto-continue. Change the **Cartridge low threshold** setting, which sets the toner level that causes a low toner alert.
- **Save/Restore Settings**. Save the current settings for the product to a file on your computer. Use this file to load the same settings onto another product or to restore these settings to this product at a later time.
- **Password**. Set a password to protect the device settings. Once a password is set, users will be prompted to enter the password before being allowed to change device settings. This password is the same as the embedded Web server password.

Device Information

The Device Information page stores data about your product for future reference. The information that you type in the fields on this page appears on the Configuration page. You can type any character in each of these fields.

NOTE: You must click **Apply** before your changes take effect.

Paper Handling

Use these options to configure your default settings. These are the same options that are available on the control-panel menus on the control panel. For more information, see Control-panel menus on page 9.

The following options are available for handling print jobs when the product is out of media:

- Select **Wait for paper to be loaded**.
- Select **Cancel** from the **Paper out action** drop-down list to cancel the print job.
- Select **Override** from the **Paper out time** drop-down list to send the print job to another paper tray.

The **Paper out time** field specifies how long the product waits before acting on your selections. You can specify from 0 to 3600 seconds.

NOTE: You must click **Apply** before your changes take effect.

Printing

Use these options to configure the settings for all print functions. These are the same options that are available on the control panel. For more information, see Control-panel menus on page 9.

NOTE: You must click **Apply** before your changes take effect.

PCL5c

Use these options to configure the settings when you are using the PCL print personality.

NOTE: You must click **Apply** before your changes take effect.

PostScript

Use this option when you are using the PostScript print personality. When the **Print PostScript error** option is turned on, the PostScript error page automatically prints when PostScript errors occur.

NOTE: You must click **Apply** before your changes take effect.

Print Quality

Use these options to improve the appearance of your print jobs. These are the same options that are available on the control panel menus. For more information, see Control-panel menus on page 9.

Color Calibration

- **Power On Calibration**. Specify whether the product should calibrate when you turn it on.
- **Calibration Timing**. Specify how frequently the product should calibrate.
- **Calibrate Now**. Set the product to calibrate immediately.

NOTE: You must click **Apply** before your changes take effect.

Print Density

Use these settings to make fine adjustments in the amount of each color of toner that is used for your printed documents.

- **Contrasts**. Contrast is the range of difference between light (highlight) and dark (shadow) colors. To increase the overall range between light and dark colors, increase the **Contrasts** setting.
- **Highlights**. Highlights are colors that are nearly white. To darken highlight colors, increase the **Highlights** setting. This adjustment does not affect midtone or shadow colors.
- **Midtones**. Midtones are colors that are halfway between white and solid density. To darken midtone colors, increase the **Midtones** setting. This adjustment does not affect highlight or shadow colors.
- **Shadows**. Shadows are colors that are nearly solid density. To darken shadow colors, increase the **Shadows** setting. This adjustment does not affect highlight or midtone colors.

Paper Types

Use these options to configure print modes that correspond to the various media types. To reset all modes to factory default settings, select **Restore modes**.

NOTE: You must click **Apply** before your changes take effect.

System Setup

Use these system settings to configure miscellaneous print settings. These settings are not available on the control panel.

NOTE: You must click **Apply** before your changes take effect.

Save/Restore Settings

Save the current settings for the product to a file on your computer. Use this file to load the same settings onto another product or to restore these settings to this product at a later time.

Password

Set a password to protect the device settings. After a password is set, users will be prompted to enter the password before they can access any of the HP ToolboxFX pages that read or write data from the device. This password is the same as the embedded Web server password.

Service

During the printing process, paper, toner, and dust particles can accumulate inside the product. Over time, this buildup can cause print-quality problems such as toner specks or smearing. HP ToolboxFX provides an easy method for cleaning the paper path.

Network Settings

The network administrator can use this tab to control the network-related settings for the product when it is connected to an IP-based network.

Shop for Supplies

This button, at the top of each page, links to a Web site where you can order replacement supplies. You must have Internet access to use this feature.

Other Links

This section contains links that connect you to the Internet. You must have Internet access in order to use any of these links. If you use a dial-up connection and did not connect when you first opened HP ToolboxFX, you must connect before you can visit these Web sites. Connecting might require that you close HP ToolboxFX and reopen it.

- **HP Instant Support**. Connects to the HP Instant Support Web site.
- **Support and Troubleshooting**. Connects to the support site for the product where you can search for help with a specific problem.
- **Product Registration**. Connects to the HP product registration Web site.

Embedded Web server

When the product is connected to the network, the embedded Web server is automatically available. The embedded web server can be accessed through a standard web browser

NOTE: When the product is directly connected to a computer, use the HP ToolboxFX to view the product status.

Use the embedded Web server to view product and network status and to manage printing functions from your computer instead of from the product control panel.

- View product control status information.
- Set the type of paper loaded in each tray.
- Determine the remaining life of all supplies and order new ones.
- View and change tray configurations.
- View and change the product settings.
- View and change network configuration.
- View support content that is specific to the current state of the product.
- Restrict access to color-printing features.

To use the embedded Web server, you must have Microsoft Internet Explorer 6 or later, Netscape Navigator 7 or later, Safari 1.2 or later, Konqueror 3.2 or later, Firefox 1.0 or later, Mozilla 1.6 or later, or Opera 7 or later. The embedded Web server works when the product is connected to an IP-based network. The embedded Web server does not support IPX-based or AppleTalk printer connections. You do not need Internet access to open and use the embedded Web server.

View the HP embedded Web server

1. In a supported Web browser on your computer, type the IP address for the product in the address/URL field. (To find the IP address, print a configuration page. See Information pages on page 68.)

   NOTE: After you open the URL, you can bookmark it so that you can return to it quickly in the future.

2. The embedded Web server has three tabs that contain settings and information about the product: the **Status** tab, the **Settings** tab, and the **Networking** tab. Click the tab that you want to view.

   See the following section for more information about each tab.

Embedded Web server sections

The table below describes the basic screens of the embedded Web server.

Tab or section	Description
Status tab Provides product, status, and configuration information.	• **Device Status**: Shows the product status and shows the life remaining of HP supplies, with 0% indicating that a supply has reached the end of its estimated life. • **Supplies Status**: Shows the approximate life remaining of HP supplies, with 0 percent indicating that a supply has reached the end of its estimated life. This page also provides supplies part numbers. • **Device Configuration**: Shows the information found on the product Configuration page. • **Network Summary**: Shows the information found on the product Network Configuration page. • **Print Info Pages**: Allows you to print the PCL, PCL6, PS Font Lists, and the supplies status page that the product generates. • **Color Usage Job Log**: Shows user color print jobs on a job-by-job basis. • **Event Log**: Shows a list of all product events and errors. • **Support** button: Provides a link to the product support page. The **Support** button can be password-protected; see Set password on page 71 • **Shop for Supplies** button: Provides a link to a page where you can order supplies for the product. The **Shop for Supplies** button can be password-protected; see Set password on page 71
Settings tab Provides the ability to configure the product from your computer.	• **Device Information**: Allows you to name the product and assign an asset number to it. Enter the name for the primary contact who will receive information about the product. • **Paper Handling**: Allows you to change the paper-handling defaults for the product. • **Printing**: Allows you to change the printing defaults for the product. • **PCL 5c**: Allows you to change the PCL 5c defaults for the product. • **PostScript**: Allows you to change the PostScript defaults for the product. • **Print Quality**: Allows you to change the print quality defaults for the product, including calibration settings. • **Print Density**: Allows you to change the contrasts, highlights, midtones, and shadows values for each supply. • **Paper Types**: Allows you to configure print modes that correspond to the media types that the product accepts. • **System Setup**: Allows you to change the system defaults for the product. • **Service**: Allows you to start the cleaning procedure on the product. • **Support** button: Provides a link to the product support page. The **Support** button can be password-protected. • **Shop for Supplies** button: Provides a link to a page where you can order supplies for the product. The **Shop for Supplies** button can be password-protected.

Tab or section	Description
	NOTE: The **Settings** tab can be password-protected; see Set password on page 71. If this product is on a network, always consult with the printer administrator before changing settings on this tab.
Networking tab Provides the ability to change network settings from your computer.	Network administrators can use this tab to control network-related settings for the product when it is connected to an IP-based network. **NOTE:** The **Networking** tab can be password-protected; see Set password on page 71.

Manage supplies

Supplies life

The print cartridge use HP ColorSphere toner. For information about the number of pages the cartridges can print, see www.hp.com/go/pageyield. Actual yield depends on specific use.

Print-cartridge storage

Do not remove the print cartridge from its package until you are ready to use it.

△ **CAUTION:** To prevent damage to the print cartridge, do not expose it to light for more than a few minutes.

HP policy on non-HP print cartridges

Hewlett-Packard Company cannot recommend the use of non-HP print cartridges, either new or remanufactured.

NOTE: Any damage caused by a non-HP print cartridge is not covered under the HP warranty and service agreements.

To install a new HP print cartridge, see Replace print cartridges on page 82. To recycle the used cartridge, follow the instructions included with the new cartridge.

HP fraud hotline and Web site

Call the HP fraud hotline (1-877-219-3183, toll-free in North America) or go to www.hp.com/go/anticounterfeit when you install an HP print cartridge and the control-panel message says the cartridge is non-HP. HP will help determine if the cartridge is genuine and take steps to resolve the problem.

Your print cartridge might not be a genuine HP print cartridge if you notice the following:

- You are experiencing a high number of problems with the print cartridge.
- The cartridge does not look like it usually does (for example, the orange pull tab is missing, or the packaging differs from HP packaging).

Print when cartridge has reached estimated end of life

An **Order Supplies** message appears when a print cartridge is nearing the end of its life. A **Replace supplies** message appears when the print cartridge has reached its estimated end of life. To ensure optimal print quality, HP recommends replacing a print cartridge when the **Replace supplies** message appears. Print-quality problems can occur when using a cartridge that has reached its estimated end of life, resulting in waste of print media and toner from other cartridges. Replacing a print cartridge when the **Replace supplies** message appears can prevent this waste.

The **Auto continue** feature in HP ToolboxFX allows the product to continue using a print cartridge that has reached the recommended replacement point.

⚠ **WARNING!** Using the **Auto continue** feature can result in unsatisfactory print quality.

WARNING! All print defects or supply failures incurred when an HP supply is used in cartridge-out-override mode will not be considered to be defects in materials or workmanship in the supply under the HP Print Cartridge Warranty Statement. For warranty information, see Print cartridge limited warranty statement on page 129.

You can enable or disable the **Auto continue** feature at any time, and you do not have to re-enable it when you install a new print cartridge. When the **Auto continue** feature is turned on, the product automatically continues printing when a print cartridge reaches the recommended replacement level. A **Replace Supplies Override In Use** message appears while a print cartridge is being used in override mode. When you replace the print cartridge with a new supply, the product deactivates the override mode until another print cartridge reaches the recommended replacement level.

Enable or disable the Cartridge out override feature

1. Open HP ToolboxFX.
2. Click the **Device Settings** folder, and then click **System Setup**.
3. Next to **Auto continue** select **On** to enable the feature. Select **Off** to disable it.

Enable or disable the Cartridge out override feature from the control panel

1. On the control-panel menu, press OK.
2. Use the Left arrow (◄) or the Right arrow (►) button to select **System setup**, and then press OK.
3. Use the Left arrow (◄) or the Right arrow (►) button to select **Print quality**, and then press OK.
4. Use the Left arrow (◄) or the Right arrow (►) button to select **Replace supplies**, and then press OK.
5. Select **Override out** to enable the feature. Select **Stop at out** to disable it.

Replace print cartridges

1. Open the front door.

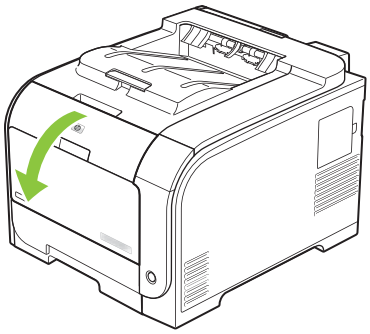

2. Pull out the print-cartridge drawer.

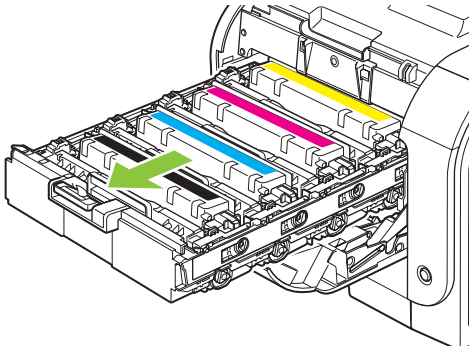

3. Grasp the handle on the old print cartridge and then pull the cartridge straight up to remove it.

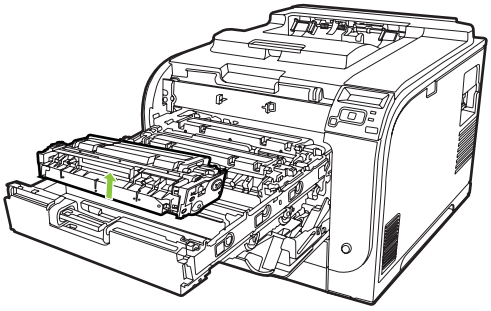

4. Remove the new print cartridge from the packaging.

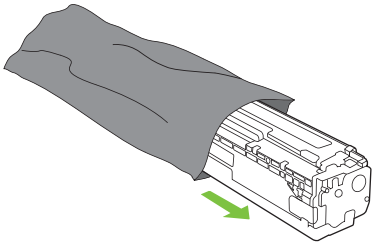

5. Remove the orange, plastic shield from the bottom of the new print cartridge.

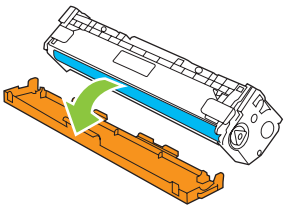

△ **CAUTION:** Do not touch the imaging drum on the bottom of the print cartridge. Fingerprints on the imaging drum can cause print-quality problems.

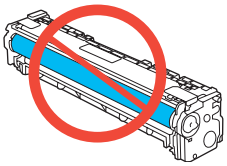

6. Insert the new print cartridge into the product.

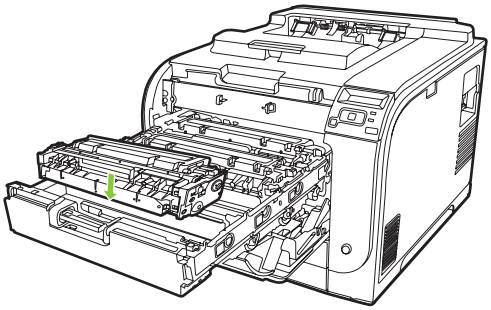

7. Pull the tab on the left side of the print cartridge straight up to completely remove the sealing tape. Discard the sealing tape.

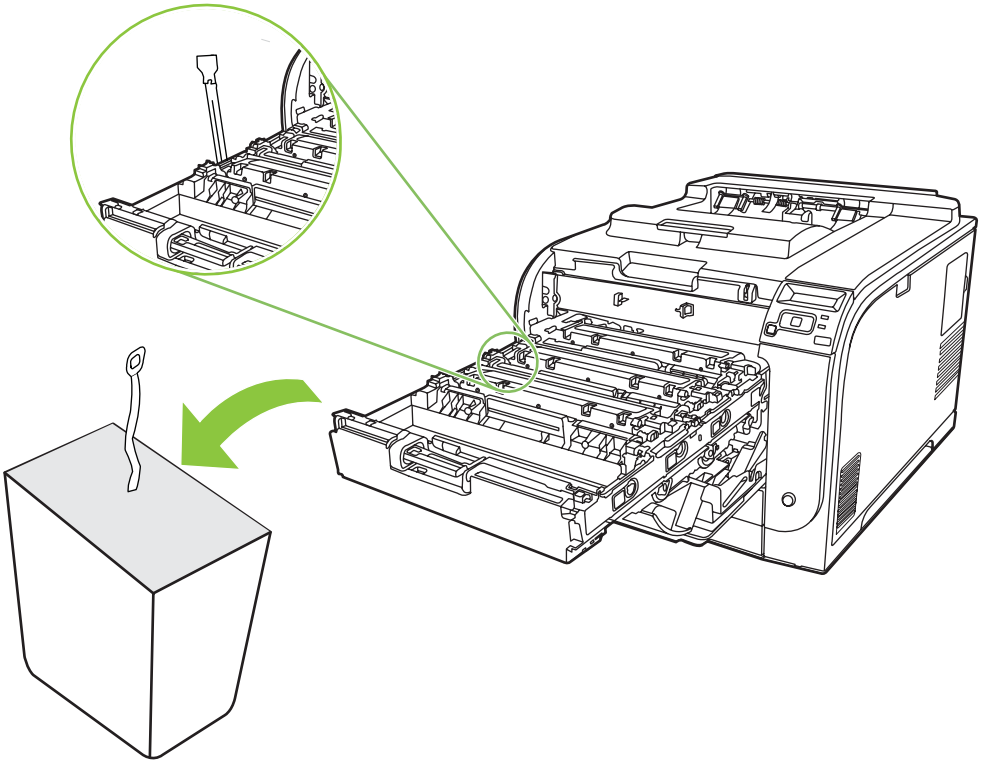

8. Close the print-cartridge drawer.

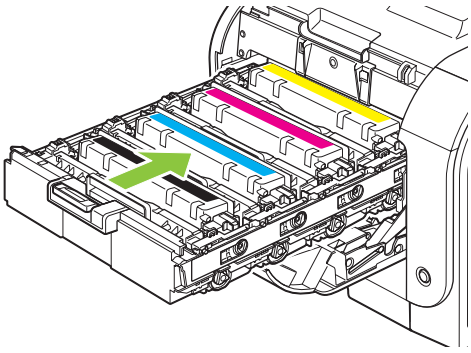

9. Close the front door.

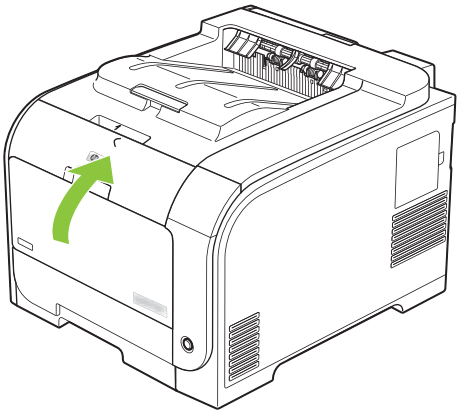

10. Place the old print cartridge in the box for the new print cartridge. Follow the recycling instructions that are included in the box.

Memory and font DIMMs

Product memory

The product has one dual inline memory module (DIMM) slot. Use the DIMM slot to upgrade the product with the following items:

- More product memory (DIMMs are available in 64, 128, and 256 MB)
- Other DIMM-based printer languages and product options
- Support-language character sets (for example, Chinese characters or Cyrillic alphabet characters).

NOTE: To order DIMMs, see Supplies and accessories on page 125.

You might want to increase product memory if you often print complex graphics or HP postscript level 3 emulation documents, or if you use many downloaded fonts. Additional memory also enables multiple collated copies to print at the maximum speed.

Before ordering additional memory, see how much memory is currently installed by printing a Configuration page. See Information pages on page 68.

CAUTION: Static electricity can damage electronic parts. When installing DIMMs, either wear an antistatic wrist strap, or frequently touch the surface of the DIMM antistatic package and then touch bare metal.

Install memory and font DIMMs

1. Turn the product off, and then disconnect all power and interface cables.
2. On the right side of the product, open the DIMM access door.

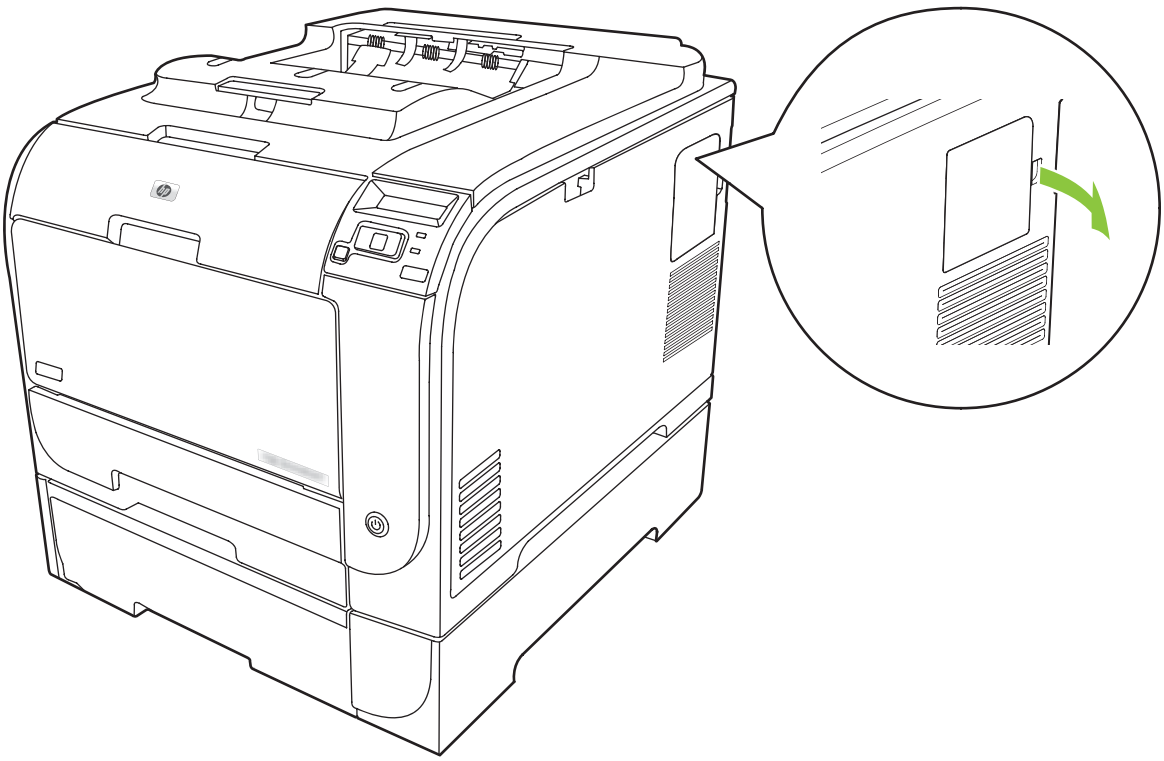

3. Remove the DIMM access door.

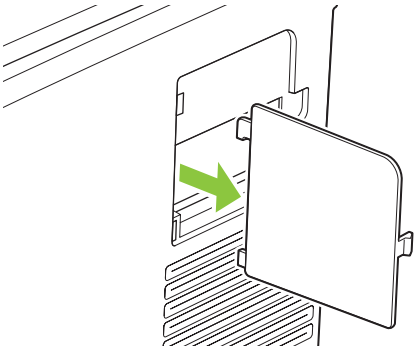

4. To replace a DIMM that is currently installed, spread the latches apart on each side of the DIMM slot, lift the DIMM up at an angle, and pull it out.

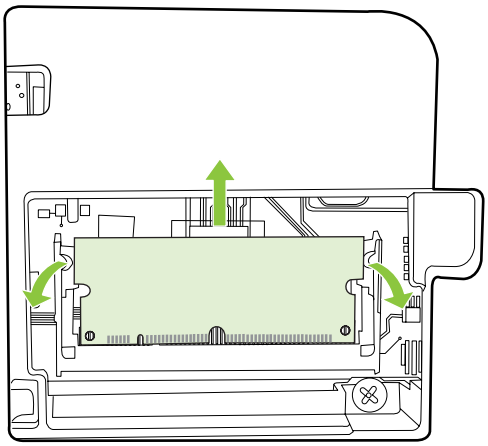

5. Remove the new DIMM from the antistatic package, and then locate the alignment notch on the bottom edge of the DIMM.

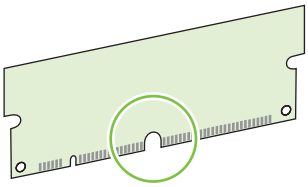

6. Holding the DIMM by the edges, align the notch on the DIMM with the bar in the DIMM slot at an angle.

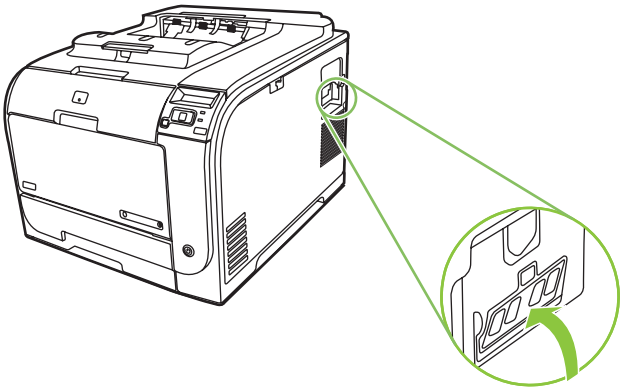

7. Push down on the DIMM until both latches engage the DIMM. When the installation is correct, the metal contacts are not visible.

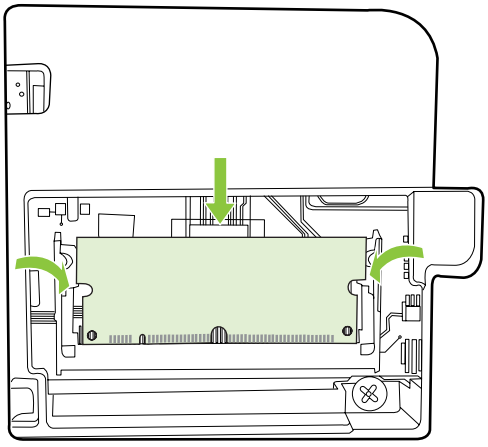

NOTE: If you have difficulty inserting the DIMM, make sure that the notch on the bottom of the DIMM is aligned with the bar in the slot. If the DIMM still does not go in, make sure that you are using the correct DIMM type.

8. Reinsert the DIMM access door.

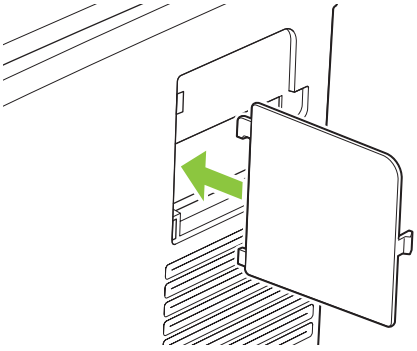

9. Close the DIMM access door.

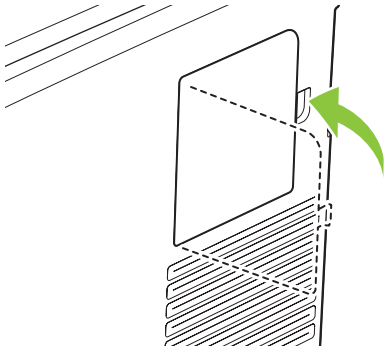

10. Reconnect the power cable and USB or network cable, and then turn on the product.

11. After installing a memory DIMM, see Enable memory on page 90.

Enable memory

If you installed a memory DIMM, set the printer driver to recognize the newly added memory.

Enable memory for Windows

1. On the **Start** menu, point to **Settings**, and click **Printers** or **Printers and Faxes**.
2. Select this product and select **Properties**.
3. On the **Configure** tab, click **More**.
4. In the **Total Memory** field, type or select the total amount of memory that is now installed.
5. Click **OK**.

Check DIMM installation

Turn the product on. Check that the product is in the **Ready** state after it has gone through the startup sequence. If an error message appears, do the following:

1. Print a Configuration page. See Information pages on page 68.
2. Check the Installed Personalities and Options section on the Configuration page and compare it with the Configuration page that you printed before the DIMM installation.
3. The DIMM might not be installed correctly. Repeat the installation procedure.

   -or-

   The DIMM may be defective. Try a new DIMM.

Clean the product

During the printing process, paper, toner, and dust particles can accumulate inside the product. Over time, this buildup can cause print-quality problems such as toner specks or smearing. This product has a cleaning mode that can correct and prevent these problems.

Clean the product using HP ToolboxFX

1. Open HP ToolboxFX. See Open HP ToolboxFX on page 69.
2. Click the **Device Settings** folder, and then click the **Service** page.
3. In the area for **Cleaning Mode**, click **Start** to begin the cleaning process.

   The product processes a single page, and then returns to the **Ready** state when the cleaning process is complete.

Clean the product using the control panel

1. Press OK to open the menus.
2. Press the Left arrow (◄) or Right arrow (►) button to highlight Service.
3. Press OK. An asterisk (*) appears next to the active selection.

4. Press the Left arrow (◄) or Right arrow (►) button to highlight Cleaning mode .
5. Press OK.

Clean the product using the embedded Web server

1. Open the embedded Web server.
2. Click the **Settings** tab.
3. Click the **Service** menu.
4. Click **Start**.

Firmware updates

To upgrade the product firmware, download the firmware update file from www.hp.com/go/ljcp2020series_software and save the file to your network or personal computer. Refer to the product install notes for instructions on how to install the firmware update file on the product.

10 Solve problems

- Basic troubleshooting checklist
- Control-panel and status-alert messages
- Clear jams
- Solve image-quality problems
- Performance problems
- Product software problems
- Solve Macintosh problems

Basic troubleshooting checklist

If you are experiencing problems with the product, use the following checklist to identify the cause of the problem:

- Is the product connected to power?
- Is the product on?
- Is the product in the **Ready** state?
- Are all necessary cables connected?
- Are genuine HP supplies installed?
- Were recently replaced print cartridges installed correctly, and was the pull tab on the cartridge removed?

For additional information about installation and setup, see the getting started guide.

If you cannot find solutions to problems in this guide, go to www.hp.com/support/ljcp2020series.

Factors that affect product performance

Several factors affect the time it takes to print a job:

- Maximum product speed, measured in pages per minute (ppm)
- The use of special paper (such as transparencies, heavy paper, and custom-size paper)
- Product processing and download time
- The complexity and size of graphics
- The speed of the computer you are using
- The USB connection

Control-panel and status-alert messages

The control-panel messages indicate the current product status or situations that might require action.

Status-alert messages appear on the computer screen (in addition to control-panel messages) when the product has certain problems. If a status-alert message is available, a ✓ appears in the **Status alert** column in the following table.

Control-panel messages appear temporarily and might require that you acknowledge the message by pressing OK to resume printing or by pressing X to cancel the job. With certain messages, the job might not finish printing or the print quality might be affected. If the message is related to printing and the auto-continue feature is on, the product will attempt to resume printing after the message has appeared for 10 seconds without acknowledgement.

For some messages, restarting the product might fix the problem. If a critical error persists, the product might require service.

Control-panel message	Status alert	Description	Recommended action
10.00.XX Supply error	✓	The supply memory for one of the print cartridges cannot be read or is missing. • 10.0000 = black supply memory error • 10.0001 = cyan supply memory error • 10.0002 = magenta supply memory error • 10.0003 = yellow supply memory error	Reinstall the print cartridge. Turn the product off and then on. If the problem is not solved, replace the cartridge.
10.10.XX Supply error	✓	• 10.1000 = black supply memory is missing • 10.1001 = cyan supply memory is missing • 10.1002 = magenta supply memory is missing • 10.1003 = yellow supply memory is missing	Check the e-label. If it is broken or damaged, replace the cartridge. Verify that the cartridge is installed in the correct location. Remove and reinstall the cartridge and then power-cycle the product. If the error is with a color cartridge, try swapping it with a different color cartridge in the tray. If the same message appears, then there is an engine problem. If a different 10.10.XX message appears, replace the cartridge.
49 Error **Turn off then on**		The product experienced an internal error.	Turn the product off, wait at least 30 seconds, and then turn the product on and wait for it to initialize. If you are using a surge protector, remove it. Plug the product

Control-panel message	Status alert	Description	Recommended action
			directly into the wall socket. Turn the product power on. If the message persists, contact HP support.
50.X Fuser error **Turn off then on**	✓	The product has experienced an error with the fuser.	Turn the product power off, wait at least 30 seconds, and then turn the product power on and wait for it to initialize. Turn off the product, wait at least 25 minutes, and then turn on the product. If you are using a surge protector, remove it. Plug the product directly into the wall socket. Turn the product power on. If the message persists, contact HP support.
51.XX Error **Turn off then on**	✓	The product has experienced an internal hardware error.	Turn the product power off, wait at least 30 seconds, and then turn the product power on and wait for it to initialize. If you are using a surge protector, remove it. Plug the product directly into the wall socket. Turn the product on. If the message persists, contact HP support.
54.XX Error **Turn off then on**	✓	The product has experienced an error with one of the internal sensors. • 54.15 = yellow • 54.16 = magenta • 54.17 = cyan • 54.18 = black	1. Open the door to the cartridge tray and slide out the cartridge tray. 2. Inspect the white mechanism on the relevant cartridge. It is located on the right side of the cartridge. 3. Push the mechanism in and out slowly. A black flag will raise up as you push it. It should move smoothly. If not, push repeatedly to try to free up any potential obstruction. 4. Push in the cartridge tray and close the door. If the message persists, contact HP support.
55.X Error **Turn off then on**	✓	The product has experienced an internal error.	Turn the product power off, wait at least 30 seconds, and then turn the product power on and wait for it to initialize.

Control-panel message	Status alert	Description	Recommended action
			If you are using a surge protector, remove it. Plug the product directly into the wall socket. Turn the product power on. If the message persists, contact HP support.
57.X Fan error **Turn off then on**	✓	The product has experienced a problem with its internal fan.	Turn the product power off, wait at least 30 seconds, and then turn the product power on and wait for it to initialize. If you are using a surge protector, remove it. Plug the product directly into the wall socket. Turn the product power on. If the message persists, contact HP support.
59.X Error **Turn off then on**	✓	The product has experienced a problem with one of the motors.	Turn the product power off, wait at least 30 seconds, and then turn the product power on and wait for it to initialize. If you are using a surge protector, remove it. Plug the product directly into the wall socket. Turn the product power on. If the message persists, contact HP support.
79 Error **Turn off then on**		The product has experienced an internal firmware error.	Turn the product power off, wait at least 30 seconds, and then turn the product power on and wait for it to initialize. If you are using a surge protector, remove it. Plug the product directly into the wall socket. Turn the product power on. If the message persists, contact HP support.
79 Service error **Turn off then on**		An incompatible DIMM is installed.	1. Turn the product power off. 2. Install a DIMM that the product supports. See Service and support on page 127 for a list of supported DIMMs. See Install memory and font DIMMs on page 86 for DIMM installation instructions. 3. Turn the product on. If the message persists, contact HP support.

Control-panel message	Status alert	Description	Recommended action
<Color> in wrong position	✓	A print cartridge is installed in the incorrect slot.	Be sure that each print cartridge is in the correct slot. From front to back, the print cartridges are installed in this order: black, cyan, magenta, yellow.
Device error **Press [OK]**		An internal error occurred.	Press OK to resume the job.
Front Door open	✓	The product front door is open.	Close the door.
Genuine HP supply installed		A genuine HP supply was installed. This message will appear briefly after the supply is installed and then be replaced by the message Ready.	No action necessary.
Incorrect supplies	✓	More than one print cartridge is installed in the incorrect slot.	Be sure that each print cartridge is in the correct slot. From front to back, the print cartridges are installed in this order: black, cyan, magenta, yellow.
Install <Color> cartridge	✓	The cartridge is either not installed or not correctly installed in the product.	Install the print cartridge. See Replace print cartridges on page 82.
Invalid driver **Press [OK]**	✓	You are using an incorrect printer driver.	Select the correct printer driver.
Jam in <location>	✓	The product has detected a jam.	Clear the jam from the location indicated. The job should continue to print. If it does not, try reprinting the job. If the message persists, contact HP support.
Jam in tray <X> **Clear jam and then Press [OK]**	✓	The product has detected a jam.	Clear the jam from the location indicated, and then press OK. If the message persists, contact HP support.
Load paper	✓	All trays are empty.	Load print media.
Load tray # <TYPE> <SIZE>	✓	A tray is configured for the media type and size that the print job is requesting, but that tray is empty.	Load the correct media into the tray, or press OK to use media in a different tray.
Load tray 1 plain <SIZE> **Cleaning mode [OK] to start**	✓	The product is ready to process the cleaning operation.	Load tray 1 with plain paper in the size indicated, and then press OK.
Load tray 1 <TYPE> <SIZE>	✓	No trays are configured for the media type and size that the print job is requesting.	Load the correct media into tray 1, or press OK to use media in a different tray.
Manual duplex **Load tray # Press [OK]**		The first side of a manual duplex job has printed, and the page needs to be loaded to process the second side.	Load the page in the indicated tray with the side to be printed face up, and the top of the page

Control-panel message	Status alert	Description	Recommended action
			away from you and then press OK.
Manual feed <TYPE> <SIZE> **Press [OK] for available media**	✓	The product is set for manual feed mode.	Press OK to clear the message *or* load the correct media into tray 1.
Memory is low **Press [OK]** **Try again later or turn off & on**	✓	The product memory is almost full.	Press OK to finish the job, or press X to cancel the job. Break the job into smaller jobs that contain fewer pages. For information about increasing the product memory, see Install memory and font DIMMs on page 86.
Misprint **Press [OK]**	✓	Print media has been delayed as it moves through the product.	Press OK to clear the message.
Non HP supply installed	✓	A non-HP supply is installed.	This message is temporary and will disappear after several seconds. If you believe you purchased an HP supply, go to www.hp.com/go/anticounterfeit. Service or repairs that are required as a result of using non-HP supplies are not covered under HP warranty.
Order <color> cartridge	✓	The identified print cartridge is nearing the end of its useful life.	Order the identified print cartridge. Printing will continue until **Replace <color> cartridge** appears. See Supplies and accessories on page 125 for more information.
Order supplies	✓	More than one supply item is low.	Check the supply-level gauges on the control panel, or print a Supplies status page to determine which cartridges are low. See Information pages on page 68. Order the identified print cartridges. Printing will continue until **Replace <color> cartridge** appears. See Supplies and accessories on page 125 for more information.
Print failure **Press [OK] If error repeats turn off then on**	✓	The product cannot process the page.	Press OK to continue printing the job, but output might be affected.

Control-panel message	Status alert	Description	Recommended action
			If the error persists, turn the power off and then on. Resend the print job.
Rear Door open	✓	The product rear door is open.	Close the door.
Remove shipping locks from <color> cartridge	✓	A print cartridge shipping lock is installed.	Be sure that the print cartridge shipping lock has been removed.
Remove shipping locks from all cartridges	✓	A print cartridge shipping lock is installed on one or more print cartridges.	Be sure that each print cartridge shipping lock has been removed.
Remove shipping material from rear door	✓	The two shipping locks have not been removed from the rear roller.	Open the rear door and remove the shipping locks.
Replace <color> cartridge	✓	The print cartridge has reached the end of life.	Replace the cartridge. See Replace print cartridges on page 82.
Replace supply **Override in use**	✓	The **Print quality** menu item **Replace supplies** is set to **Override out**.	You can continue printing until you notice a decrease in print quality. See System setup menu on page 11.
Unexpected size in tray # **Load [size] Press [OK]**	✓	The product has detected print media in the tray that does not match the configuration for the tray.	Load the correct media into the tray, or configure the tray for the size that you have loaded. See Load paper and print media on page 50.
Used <color> Cartridge in use	✓	A used print cartridge was detected and accepted.	No action necessary.
Used supplies in use	✓	Used print cartridges are installed.	No action necessary.
Used supply installed **To accept Press [OK]**	✓	A used print cartridge is installed.	Press OK to continue.

Clear jams

Common causes of jams

Common causes of jams[1]

Cause	Solution
The paper length and width guides are not adjusted correctly.	Adjust the guides so they are against the paper stack.
The media does not meet specifications.	Use only media that meets HP specifications. See Paper and print media on page 43.
You are using media that has already passed through a printer or copier.	Do not use media that has been previously printed on or copied.
An input tray is loaded incorrectly.	Remove any excess media from the input tray. Make sure that the stack is below the maximum stack height mark in the tray. See Load paper and print media on page 50.
The media is skewed.	The input-tray guides are not adjusted correctly. Adjust them so they hold the stack firmly in place without bending it.
The media is binding or sticking together.	Remove the media, flex it, rotate it 180 degrees, or flip it over. Reload the media into the input tray. **NOTE:** Do not fan paper. Fanning can create static electricity, which can cause paper to stick together.
The media is removed before it settles into the output bin.	Wait until the page completely settles in the output bin before removing it.
The media is in poor condition.	Replace the media.
The internal rollers from the tray are not picking up the media.	Remove the top sheet of media. If the media is heavier than 163 g/m^2 (43 lb), it might not be picked from the tray.
The media has rough or jagged edges.	Replace the media.
The media is perforated or embossed.	Perforated or embossed media does not separate easily. Load sheets one at a time.
Paper was not stored correctly.	Replace the paper in the trays. Paper should be stored in the original packaging in a controlled environment.

[1] If the product continues to jam, contact HP Customer Support or your authorized HP service provider.

Jam locations

Use this illustration to find the locations of jams.

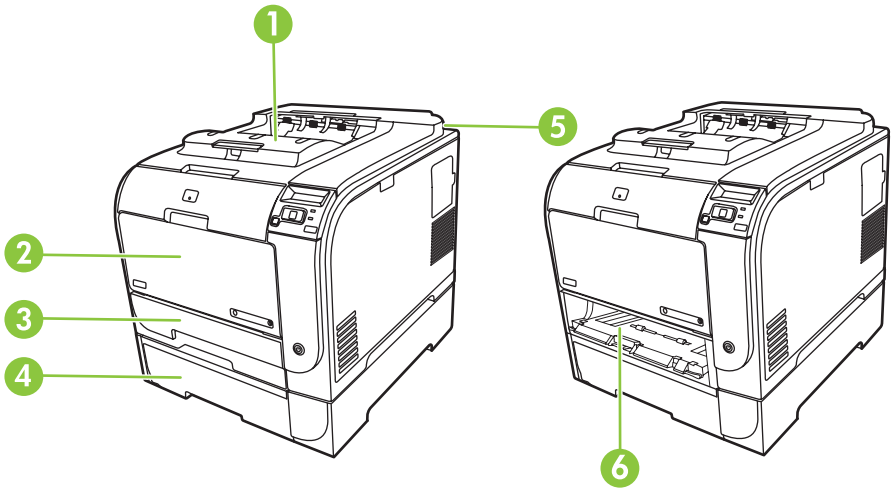

1	Output bin
2	Tray 1
3	Tray 2
4	Optional tray 3
5	Fuser (behind the rear door)
6	Tray 2 jam-access area

Change Jam Recovery setting

When the Jam Recovery feature is turned on, the product reprints any pages that are damaged during a jam.

Use HP ToolboxFX to turn on the Jam Recovery feature.

1. Open HP ToolboxFX.
2. Click the **Device Settings** folder, and then click **System Setup**.
3. Next to **Jam Recovery**, select **On** from the drop-down list.

Clear jams in tray 1

NOTE: If the sheet tears, make sure that all of the fragments are removed before you resume printing.

Pull the jammed sheet from tray 1.

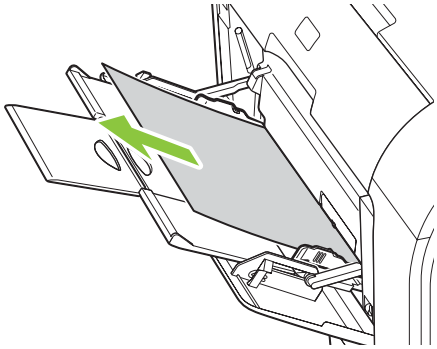

If paper has entered far enough into tray 1, remove tray 2, drop the tray 1 plate down, and then remove the paper from the opening.

Clear jams in tray 2

1. Pull out tray 2 and place it on a flat surface.

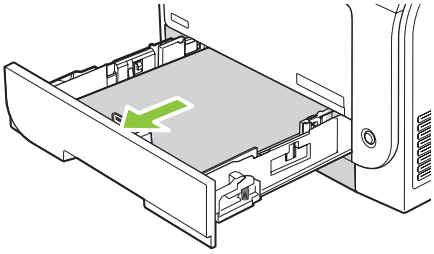

2. Lower the jam-access tray.

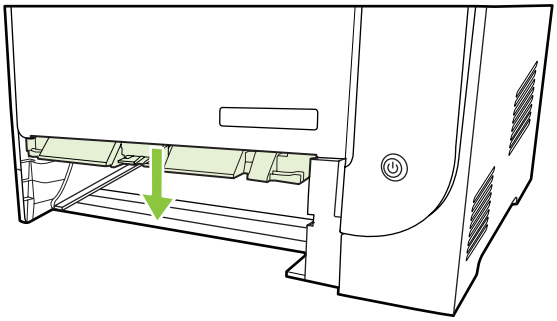

3. Remove the jammed sheet by pulling it straight out.

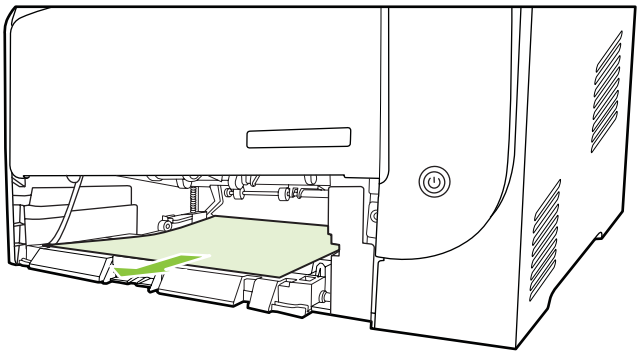

4. Replace tray 2.

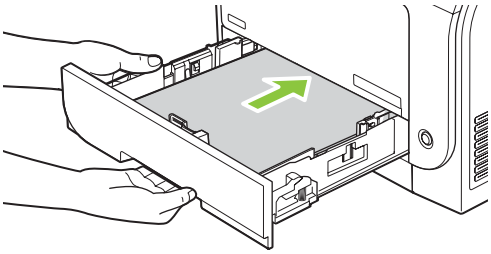

5. Press **OK** to continue printing.

Clear jams in tray 3

1. Pull out tray 3 and place it on a flat surface.

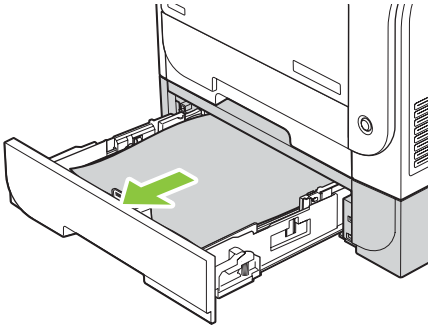

2. Remove the jammed sheet by pulling it straight out.

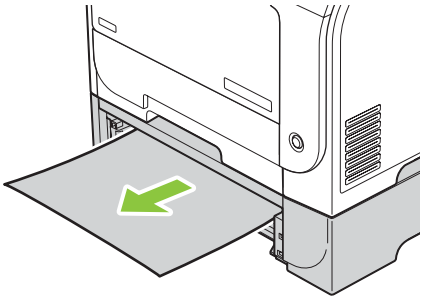

3. Replace tray 3.

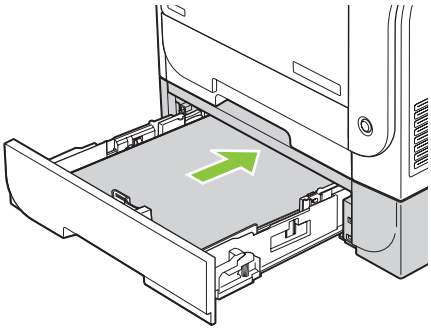

4. Press **OK** to continue printing.

Clear jams in fuser area

1. Open the rear door.

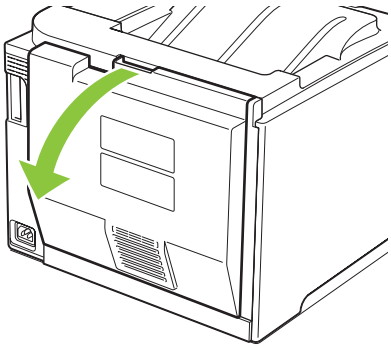

2. If necessary, push the guide (callout 1) and remove any visible paper (callout 2) from the bottom of the delivery area.

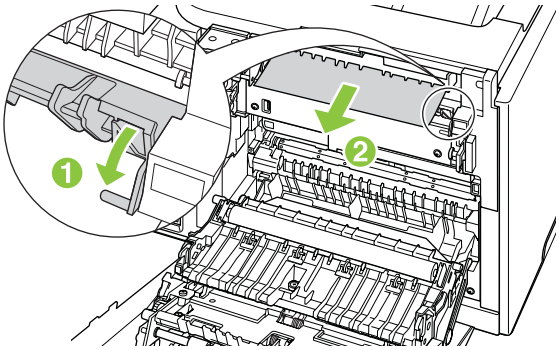

NOTE: If the sheet tears, make sure that all fragments are removed before you resume printing. Do not use sharp objects to remove fragments.

3. Close the rear door.

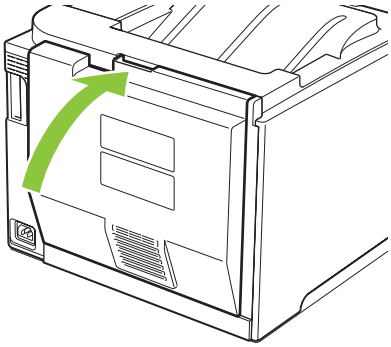

Clear jams in output bin

1. Look for jammed paper in the output bin area.
2. Remove any visible media.

   NOTE: If the sheet tears, make sure that all fragments are removed before resuming printing.

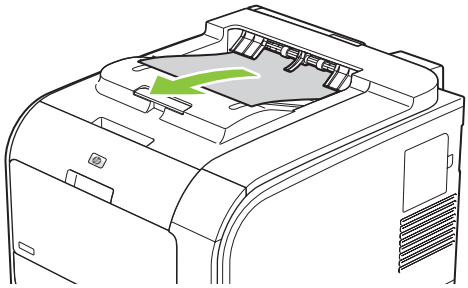

3. Open and then close the rear door to clear the message.

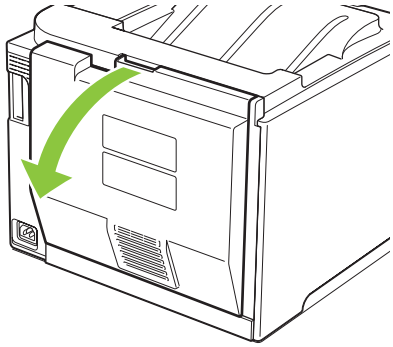

Clear jams in duplexer (duplexing models only)

1. Open the rear door.

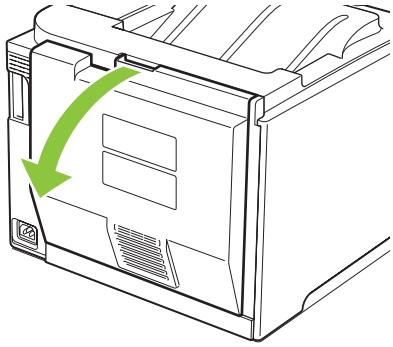

2. If necessary, pull the guide (callout 1) and remove any visible paper (callout 2) from the bottom of the delivery area.

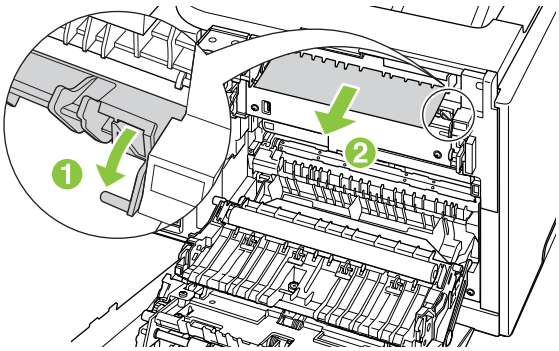

3. If necessary, remove any visible paper from bottom side of the duplexing unit.

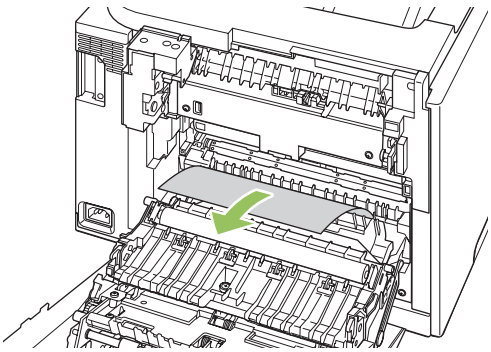

4. If you can not see any jammed paper, lift the duplexing unit using the tab on the side of the duplexing unit.

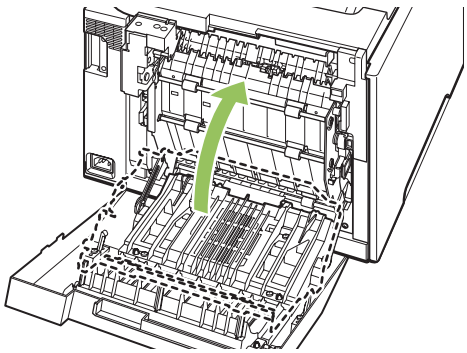

5. If you can see the trailing edge of the paper, remove the paper from the product.

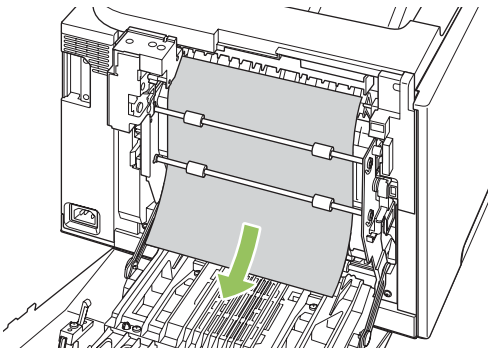

6. If you can see the leading edge of the paper, remove it from the product.

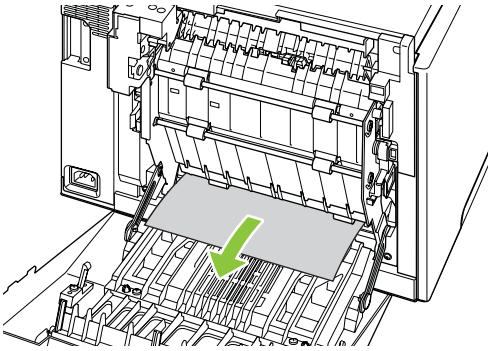

7. Close the rear door.

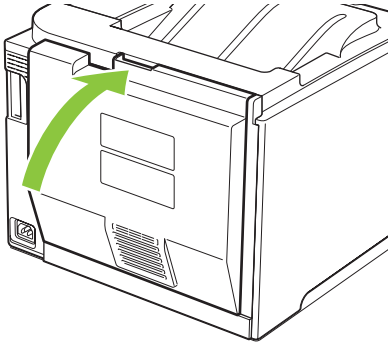

Solve image-quality problems

Occasionally, you might encounter problems with print quality. The information in the following sections helps you identify and resolve these issues.

Identify and correct print defects

Use the checklist and print-quality issues charts in this section to solve print-quality problems.

Print-quality checklist

General print-quality problems can be solved by using the following checklist:

1. Make sure the shipping locks have been removed from the transfer roller inside the rear door.
2. Make sure that the paper or print media that you are using meets specifications. Generally, smoother paper provides better results.
3. If you are using a special print media such as labels, transparencies, glossy, or letterhead, ensure that you have printed by type.
4. Print a Configuration page and Supplies status page. See Information pages on page 68.
   - Check the Supplies status page to see if any supplies are low or have reached their estimated end of life. No information is provided for non-HP print cartridges.
   - If the pages do not print correctly, the problem is with the hardware. Contact HP Customer Care. See Service and support on page 127 or the flyer that came in the box.
5. Print a Demo page from HP ToolboxFX. If the page prints, the problem is with the printer driver.
6. Try printing from a different program. If the page prints correctly, the problem is with the program from which you were printing.
7. Restart the computer and the product and try printing again. If the problem is not resolved, choose one of these options:
   - If the problem is affecting all printed pages, see General print quality issues on page 111.
   - If the problem is affecting only pages printed in color, see Solve issues with color documents on page 115.

General print quality issues

The following examples depict Letter-size paper that has passed through the product short-edge first. These examples illustrate problems that would affect all of the pages that you print, whether you print in color or in black only. The topics that follow list the typical cause and solution for each of these examples.

Problem	Cause	Solution
Print is light or faded.	The media might not meet HP specifications.	Use media that meets HP specifications.
	One or more print cartridges might be defective.	Print the Supplies status page to check the remaining life. See Information pages on page 68. Replace any low print cartridges. See Replace print cartridges on page 82.
	The product is set to override the **Replace <color> cartridge** message and to continue printing.	Replace any low print cartridges. See Replace print cartridges on page 82.
	The print density settings may have been changed.	Set the print density setting to 0.
	The product may need to be calibrated.	Run a calibration. See Calibrate the product on page 118.
Toner specks appear.	The media might not meet HP specifications.	Use media that meets HP specifications.
	The paper path might need cleaning.	Clean the paper path. See Clean the product on page 90.
	One or more of the cartridges may be leaking.	Try to verify the color of the toner specks and check the cartridge for leaks.
	The cartridge waste tank may be overfilled.	Check for error code 10.98.XX in the event log. See Event log on page 70. The XX portion of the code identifies the cartridge (00 is black, 01 is cyan, 02 is magenta, 03 is yellow). If the error was logged, replace the affected cartridge.
Dropouts appear.	A single sheet of print media might be defective.	Try reprinting the job.
	The moisture content of the paper is uneven or the paper has moist spots on its surface.	Try different paper, such as high-quality paper that is intended for color laser printers.
	The paper lot is flawed. The manufacturing processes can cause some areas to reject toner.	Try different paper, such as high-quality paper that is intended for color laser printers.

Problem	Cause	Solution
Vertical streaks or bands appear on the page. 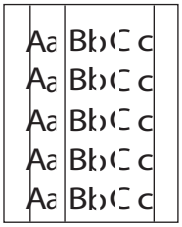	One or more print cartridges might be defective.	Print the Supplies status page to check the remaining life. See Information pages on page 68. Use HP ToolboxFX to troubleshoot the problem. Replace any low print cartridges. See Replace print cartridges on page 82.
	The product is set to override the **Replace <color> cartridge** message and to continue printing.	Replace any low print cartridges. See Replace print cartridges on page 82.
The amount of background toner shading becomes unacceptable.	Very dry (low humidity) conditions can increase the amount of background shading.	Check the device environment.
	One or more print cartridges might be defective.	Replace any low print cartridges. See Replace print cartridges on page 82.
	The product is set to override the **Replace <color> cartridge** message and to continue printing.	Replace any low print cartridges. See Replace print cartridges on page 82.
	Smooth media shows more background than plain media	Consider using rougher media.
Toner smears appear on the media.	The media might not meet HP specifications.	Use media that meets HP specifications.
	If toner smears appear on the leading edge of the paper, the media guides are dirty, or debris has accumulated in the print path.	Clean the media guides. Clean the paper path. See Clean the product on page 90.
The toner smears easily when touched. 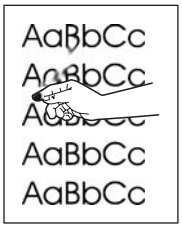	The device is not set to print on the type of media on which you want to print.	In the printer driver, select the **Paper** tab and set **Type is** to match the type of media on which you are printing. Print speed might be slower if you are using heavy paper.
	The media might not meet HP specifications.	Use media that meets HP specifications.
	The paper path might need cleaning.	Clean the paper path. See Clean the product on page 90.

Problem	Cause	Solution
Marks repeatedly appear at even intervals on the printed side of the page. 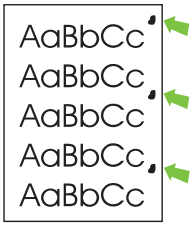	The device is not set to print on the type of media on which you want to print.	In the printer driver, select the **Paper** tab and set **Type is** to match the type of paper on which you are printing. Print speed might be slower if you are using heavy paper.
	Internal parts might have toner on them.	The problem typically corrects itself after a few more pages.
	The paper path might need cleaning.	Clean the paper path. See Clean the product on page 90.
	The fuser might be damaged or dirty.	To determine if the fuser has a problem, open the HP ToolboxFX and print the print-quality diagnostics page. See Open HP ToolboxFX on page 69. Contact HP Customer Care. See Service and support on page 127 or the support flyer that came in the box.
	A print cartridge may have a problem.	To determine which cartridge has a problem, open the HP ToolboxFX and print the print-quality diagnostics page. See Open HP ToolboxFX on page 69.
Marks repeatedly appear at even intervals on the unprinted side of the page. 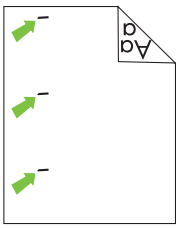	Internal parts might have toner on them.	The problem typically corrects itself after a few more pages.
	The paper path might need cleaning.	Clean the paper path. See Clean the product on page 90.
	The fuser might be damaged or dirty.	To determine if the fuser has a problem, open the HP ToolboxFX and print the print-quality diagnostics page. See Open HP ToolboxFX on page 69. Contact HP Customer Care. See Service and support on page 127 or the support flyer that came in the box.
The printed page contains misformed characters. 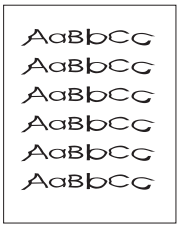	The media might not meet HP specifications.	Use a different paper, such as high-quality paper that is intended for color laser printers.
	If characters are incorrectly formed so that they produce a wavy effect, you may need to calibrate the product or the laser scanner might need service.	Verify that the problem also occurs on the Configuration page. If so, contact HP Customer Care. See Service and support on page 127 or the support flyer that came in the box.

Problem	Cause	Solution
The printed page is curled or wavy. 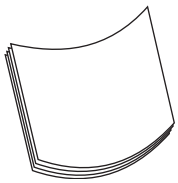	The device is not set to print on the type of media on which you want to print.	In the printer driver, select the **Paper** tab and set **Type is** to match the type of paper on which you are printing. Print speed might be slower if you are using heavy paper.
	The **Service** menu item **Less paper curl** is set to **Off**.	Use the control-panel menus to change the setting. See Control-panel menus on page 9.
	The media might not meet HP specifications.	Use a different paper, such as high-quality paper that is intended for color laser printers.
	Both high temperature and humidity can cause paper curl.	Check the device environment. Adjust curl modes from the control panel or HP ToolboxFX.
Text or graphics are skewed on the printed page. 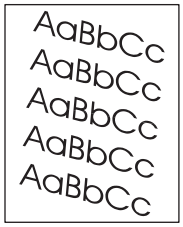	The media might be loaded incorrectly.	Make sure that the paper or other print media is loaded correctly and that the media guides are not too tight or too loose against the stack. See Load paper and print media on page 50.
	The media might not meet HP specifications.	Use a different paper, such as high-quality paper that is intended for color laser printers.
The printed page contains wrinkles or creases. 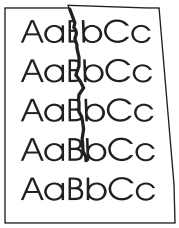	The media might be loaded incorrectly.	Verify that the media is loaded correctly and that the media guides are not too tight or too loose against the stack. See Load paper and print media on page 50. Turn over the stack of paper in the input tray, or try rotating the paper 180° in the input tray.
	The media might not meet HP specifications.	Use a different paper, such as high-quality paper that is intended for color laser printers.
Toner appears around the printed characters. 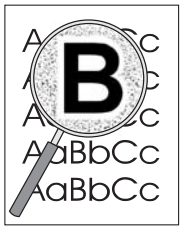	The media might be loaded incorrectly.	Turn over the stack of paper in the tray.
	If large amounts of toner have scattered around the characters, the paper might have high resistivity.	Use a different paper, such as high-quality paper that is intended for color laser printers.

Problem	Cause	Solution
An image that appears at the top of the page (in solid black) repeats farther down the page (in a gray field). 	Software settings might affect image printing.	In your software program, change the tone (darkness) of the field in which the repeated image appears. In your software program, rotate the whole page 180° to print the lighter image first.
	The order of images printed might affect printing.	Change the order in which the images are printed. For example, have the lighter image at the top of the page, and the darker image farther down the page.
	A power surge might have affected the device.	If the defect occurs later in a print job, turn the device off for 10 minutes, and then turn on the device to restart the print job.
		Use non-glossy media to help reduce the severity of the defect

Solve issues with color documents

This section describes issues that can occur when you print in color.

Problem	Cause	Solution
Only black is printing when the document should be printing in color. 	Color mode is not selected in your program or printer driver or the restric color setting is on..	Select color mode instead of grayscale mode or turn off the restrict color setting.
	The correct printer driver might not be selected in the program.	Select the correct printer driver.
	The device might not be correctly configured.	Print a Configuration page (see Information pages on page 68). If no color appears on the Configuration page, contact HP Customer Care. See Service and support on page 127 or the support flyer that came in the box.
	The color supply is out and the **Color Supply Out** menu setting is set to **Continue Black**.	Replace the color supply.

Problem	Cause	Solution
One or more colors are not printing, or are inaccurate. 	Sealing tape might be on the print cartridges.	Verify that the sealing tape has been completely removed from the print cartridges.
	The media might not meet HP specifications.	Use a different paper, such as high-quality paper that is intended for color laser printers.
	The device might be operating in excessively humid conditions.	Verify that the device environment is within humidity specifications.
	One or more print cartridges might be defective.	Replace any low print cartridges. See Replace print cartridges on page 82.
	The product is set to override the **Replace <color> cartridge** message and to continue printing.	Replace any low print cartridges. See Replace print cartridges on page 82.
	One or more of the cartridges may not have been engaged properly by the print engine.	Remove and reinstall the cartridges.
A color is printing inconsistently after you load a new print cartridge. 	Another print cartridge might be defective.	Remove the print cartridge for the color that is printing inconsistently and reinstall it.
	The product is set to override the **Replace <color> cartridge** message and to continue printing.	Replace any low print cartridges. See Replace print cartridges on page 82.
The colors on the printed page do not match the colors as they appear on the screen. 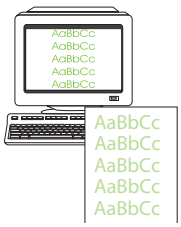	The colors on your computer monitor might differ from the device output.	See Match colors on page 62
	If extremely light colors or extremely dark colors on screen are not printing, your software program might interpret extremely light colors as white or extremely dark colors as black.	If possible, avoid using extremely light or extremely dark colors.
	The media might not meet HP specifications.	Use a different paper, such as high-quality paper that is intended for color laser printers.
The finish on the printed color page is inconsistent. 	The media might be too rough.	Use a smooth paper or print media, such as a high-quality paper that is made for color laser printers. Generally, smoother media produces better results.

Use HP ToolboxFX to troubleshoot print-quality problems

NOTE: Before proceeding, print a Supplies status page to see the approximate number of pages remaining for each print cartridge. See Information pages on page 68.

From the HP ToolboxFX software you can print a page that helps identify whether a specific print cartridge is causing the problem, or if the problem is with the product itself. The print-quality troubleshooting page prints five bands of color, which are divided into four overlapping sections. By examining each section, you can isolate the problem to a particular cartridge.

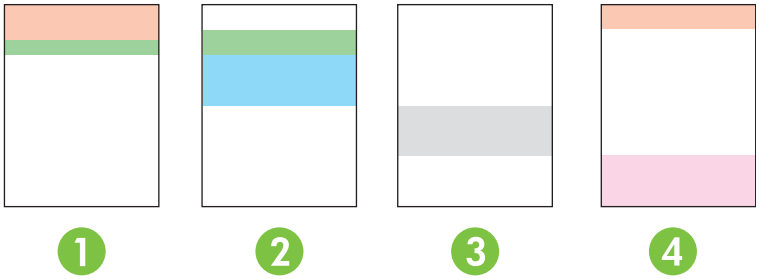

Section	Print-cartridge
1	Yellow
2	Cyan
3	Black
4	Magenta

This page helps identify four general issues:

- **Streaks in only one color**: This is most likely a cartridge issue. Remove the cartridge and look for debris on it. If no debris is found and the defect continues after the cartridge is reinstalled, replace the cartridge.
- **Streaks in all colors (in same location)**: Clean the printer and call for service if the problem continues.
- **Repeating defect in multiple colors**:

  Repeating dot in multiple colors: If the dot repeats at roughly 57 or 58 mm, run a cleaning page to clean fuser and run several white pages of paper to clean the roller. If defect does not repeat at 57 or 58 mm, replace the cartridge of the color of the dot.

  Repeating band in multiple colors: Contact HP Support.
- **Single dot or Single band in one color**: Print three or four additional troubleshooting pages. If the band or dot is only in one color on most of the pages, replace the cartridge of that color. If the band or dot moves to a different color, contact HP Support.

For more troubleshooting information, try the following:

- See Solve image-quality problems on page 110 in this guide.
- Go to www.hp.com/support/ljcp2020series.
- Contact HP Customer Care. See Service and support on page 127..

Print the print-quality troubleshooting page

1. Open HP ToolboxFX. See Open HP ToolboxFX on page 69.
2. Click the **Help** folder, and then click the **Troubleshooting** page.
3. Click the **Print** button, and then follow the directions on the printed pages.

Optimize and improve print quality

Always make sure that the **Type is** setting in the printer driver matches the type of paper that you are using.

Use the print-quality settings in the printer driver to prevent print-quality problems.

Use the **Device Settings** area in HP ToolboxFX to adjust settings that affect print quality. See Open HP ToolboxFX on page 69.

Also use HP ToolboxFX to help troubleshoot print-quality problems. See Use HP ToolboxFX to troubleshoot print-quality problems on page 117.

Calibrate the product

If you experience any print-quality problems, calibrate the product.

Calibrate the product using HP ToolboxFX

1. Open HP ToolboxFX. See Open HP ToolboxFX on page 69.
2. Click the **Device Settings** folder, and then click the **Print Quality** page.
3. In the area for Color Calibration, select the **Calibrate Now** check box.
4. Click **Apply** to calibrate the product immediately.

Calibrate the product from the control panel

1. On the control-panel menu, press OK.
2. Use the Left arrow (◄) or the Right arrow (►) button to select **System setup**, and then press OK.
3. Use the Left arrow (◄) or the Right arrow (►) button to select **Print quality**, and then press OK.
4. Use the Left arrow (◄) or the Right arrow (►) button to select **Calibrate color**, and then press OK.
5. Use the Left arrow (◄) or the Right arrow (►) button to select **Calibrate now**, and then press OK to calibrate the product.

Performance problems

Problem	Cause	Solution
Pages print but are totally blank.	The sealing tape might still be in the print cartridges.	Verify that the sealing tape has been completely removed from the print cartridges.
	The document might contain blank pages.	Check the document that you are printing to see if content appears on all of the pages.
	The product might be malfunctioning.	To check the product, print a Configuration page.
Pages print very slowly.	Heavier media types can slow the print job.	Print on a different type of media.
	Complex pages can print slowly.	Proper fusing may require a slower print speed to ensure the best print quality.
	Paper type not set correctly.	Select the type to match the paper.
Pages did not print.	The product might not be pulling media correctly.	Make sure paper is loaded in the tray correctly. If the problem persists, you might need to replace the pickup rollers and the separation pad. See Service and support on page 127.
	The media is jamming in the device.	Clear the jam. See Clear jams on page 101.
	The USB cable might be defective or incorrectly connected.	• Disconnect the USB cable at both ends and reconnect it. • Try printing a job that has printed in the past. • Try using a different USB cable.
	Other devices are running on your computer.	The product might not share a USB port. If you have an external hard drive or network switchbox that is connected to the same port as the product, the other device might be interfering. To connect and use the product, you must disconnect the other device or you must use two USB ports on the computer.

Product software problems

Problem	Solution
A printer driver for the product is not visible in the **Printer** folder	• Reinstall the product software. **NOTE:** Close any applications that are running. To close an application that has an icon in the system tray, right-click the icon, and select **Close** or **Disable**. • Try plugging the USB cable into a different USB port on the computer.
An error message was displayed during the software installation	• Reinstall the product software. **NOTE:** Close any applications that are running. To close an application that has an icon in the task bar, right-click the icon, and select **Close** or **Disable**. • Check the amount of free space on the drive where you are installing the product software. If necessary, free up as much space as you can, and reinstall the product software. • If necessary, run the Disk Defragmenter, and reinstall the product software.
The product is in Ready mode, but nothing prints	• Print a Configuration page, and verify the product functionality. • Verify that all of the cables are correctly seated and within specifications. This includes the USB and power cables. Try a new cable.

Solve Macintosh problems

Solve problems with Mac OS X

NOTE: If you are installing the product using a USB connection, **do not** connect the USB cable to the device and the computer before you install the software. Connecting the USB cable will cause the Mac OS X to automatically install the product, but the installation will be faulty. You must then uninstall the product, disconnect the USB cable, reinstall the software from the product CD-ROM, and reconnect the USB cable when the software prompts you.

The printer driver is not listed in the Print Center or Printer Setup Utility.

Cause	Solution
The product software might not have been installed or was installed incorrectly.	Make sure that the product PPD file is in the following hard-drive folder: `LIBRARY/PRINTERS/PPDS/CONTENTS/RESOURCES/<LANG>.LPROJ` , where <lang> is the two-letter language code for the language that you are using. If necessary, reinstall the software. See the getting started guide for instructions.
The PPD file is corrupt.	Delete the PPD file from the following hard-drive folder: `LIBRARY/PRINTERS/PPDS/CONTENTS/RESOURCES/<LANG>.LPROJ` , where <lang> is the two-letter language code for the language that you are using. Reinstall the software. See the getting started guide for instructions.

The product name, IP address, or Bonjour printer name does not appear in the printer list in the Print & Fax Center or Printer Setup Utility.

Cause	Solution
The product might not be ready.	Make sure that the cables are connected correctly, the product is on, and the Ready light is on. If you are connecting through a USB or Ethernet hub, try connecting directly to the computer or use a different port.
The wrong connection type might be selected.	Make sure that USB, IP Printing, or Bonjour is selected, depending on the type of connection.
The wrong product name, IP address, or Bonjour host name is being used.	Print a Configuration page (see Information pages on page 68). Verify that the product name, IP address, or Bonjour host name on the Configuration page matches the product name, IP address, or Bonjour host name in the Print Center or Printer Setup Utility.
The interface cable might be defective or of poor quality.	Replace the interface cable with a high-quality cable.

The printer driver does not automatically set up your selected product in the Print Center or Printer Setup Utility.

Cause	Solution
The product might not be ready.	Make sure that the cables are connected correctly, the product is on, and the Ready light is on. If you are connecting through a USB or

The printer driver does not automatically set up your selected product in the Print Center or Printer Setup Utility.

Cause	Solution
	Ethernet hub, try connecting directly to the computer or use a different port.
The product software might not have been installed or was installed incorrectly.	Make sure that the product PPD file is in the following hard-drive folder: `LIBRARY/PRINTERS/PPDS/CONTENTS/RESOURCES/<LANG>.LPROJ` , where <lang> is the two-letter language code for the language that you are using. If necessary, reinstall the software. See the getting started guide for instructions.
The PPD file is corrupt.	Delete the PPD file from the following hard-drive folder: `LIBRARY/PRINTERS/PPDS/CONTENTS/RESOURCES/<LANG>.LPROJ` , where <lang> is the two-letter language code for the language that you are using. Reinstall the software. See the getting started guide for instructions.
The interface cable might be defective or of poor quality.	Replace the interface cable with a high-quality cable.

A print job was not sent to the product that you wanted.

Cause	Solution
The print queue might be stopped.	Restart the print queue. Open **Print Monitor** and select **Start Jobs**.
The wrong product name, IP address, or Bonjour printer name is being used.	Print a Configuration page (see Information pages on page 68). Verify that the product name, IP address, or Bonjour printer name on the Configuration page matches the product name, IP address, or Bonjour printer name in the Print Center or Printer Setup Utility.

An EPS file prints with incorrect fonts.

Cause	Solution
This problem occurs with some programs.	• Try downloading the fonts that are contained in the EPS file to the product before printing. • Send the file in ASCII format instead of binary encoding.

You are unable to print from a third-party USB card.

Cause	Solution
This error occurs when the software for USB printers is not installed.	When adding a third-party USB card, you might need the Apple USB Adapter Card Support software. The most current version of this software is available from the Apple Web site.

When connected with a USB cable, the product does not appear in the Print Center or Printer Setup Utility after the driver is selected.

Cause	Solution
This problem is caused by either a software or a hardware component.	**Software troubleshooting** • Check that your Macintosh supports USB and has the appropriate USB software from Apple. • Verify that your Macintosh operating system is Mac OS X V10.28 or later. **Hardware troubleshooting** • Check that the product is turned on. • Verify that the USB cable is connected correctly. • Check that you are using the appropriate high-speed USB cable. • Ensure that you do not have too many USB devices drawing power from the chain. Disconnect all of the devices from the chain, and connect the cable directly to the USB port on the host computer. • Check to see if more than two nonpowered USB hubs are connected in a row on the chain. Disconnect all of the devices from the chain and connect the cable directly to the USB port on the host computer. **NOTE:** The iMac keyboard is a nonpowered USB hub.

A Supplies and accessories

Order supplies and accessories

Table A-1 Supplies and accessories

Part	Part number	Type/size
Print cartridges For information about the yield for the cartridges, see www.hp.com/go/pageyield. Actual yield depends on specific use.	CC530A	Black print cartridge with HP ColorSphere toner
	CC531A	Cyan print cartridge with HP ColorSphere toner
	CC532A	Yellow print cartridge with HP ColorSphere toner
	CC533A	Magenta print cartridge with HP ColorSphere toner
Cables	C6518A	USB 2.0 printer cable (2-meter [6.5-foot] standard)
Memory	CB421A	64MB DDR2 144 pin SDRAM DIMM
	CB422A	128MB DDR2 144 pin SDRAM DIMM
	CB423A	256MB DDR2 144 pin SDRAM DIMM
Optional tray 3	CB500A	250-sheet input tray for standard sizes.
Reference materials	5851-1468	*HP LaserJet Printer Family Print Media Specification Guide* (see www.hp.com/support/ljpaperguide)

B Service and support

- Hewlett-Packard limited warranty statement
- Print cartridge limited warranty statement
- End User License Agreement
- Customer support
- Repack the product
- Service information form

Hewlett-Packard limited warranty statement

HP PRODUCT	DURATION OF LIMITED WARRANTY
HP Color LaserJet CP2020 Series printers	One-year limited warranty

HP warrants to you, the end-user customer, that HP hardware and accessories will be free from defects in materials and workmanship after the date of purchase, for the period specified above. If HP receives notice of such defects during the warranty period, HP will, at its option, either repair or replace products which prove to be defective. Replacement products may be either new or equivalent in performance to new.

HP warrants to you that HP software will not fail to execute its programming instructions after the date of purchase, for the period specified above, due to defects in material and workmanship when properly installed and used. If HP receives notice of such defects during the warranty period, HP will replace software which does not execute its programming instructions due to such defects.

HP does not warrant that the operation of HP products will be uninterrupted or error free. If HP is unable, within a reasonable time, to repair or replace any product to a condition as warranted, you will be entitled to a refund of the purchase price upon prompt return of the product.

HP products may contain remanufactured parts equivalent to new in performance or may have been subject to incidental use.

Warranty does not apply to defects resulting from (a) improper or inadequate maintenance or calibration, (b) software, interfacing, parts or supplies not supplied by HP, (c) unauthorized modification or misuse, (d) operation outside of the published environmental specifications for the product, or (e) improper site preparation or maintenance.

TO THE EXTENT ALLOWED BY LOCAL LAW, THE ABOVE WARRANTIES ARE EXCLUSIVE AND NO OTHER WARRANTY OR CONDITION, WHETHER WRITTEN OR ORAL, IS EXPRESSED OR IMPLIED AND HP SPECIFICALLY DISCLAIMS ANY IMPLIED WARRANTIES OR CONDITIONS OF MERCHANTABILITY, SATISFACTORY QUALITY, AND FITNESS FOR A PARTICULAR PURPOSE. Some countries/regions, states or provinces do not allow limitations on the duration of an implied warranty, so the above limitation or exclusion might not apply to you. This warranty gives you specific legal rights and you might also have other rights that vary from country/region to country/region, state to state, or province to province.

HP's limited warranty is valid in any country/region or locality where HP has a support presence for this product and where HP has marketed this product. The level of warranty service you receive may vary according to local standards. HP will not alter form, fit or function of the product to make it operate in a country/region for which it was never intended to function for legal or regulatory reasons.

TO THE EXTENT ALLOWED BY LOCAL LAW, THE REMEDIES IN THIS WARRANTY STATEMENT ARE YOUR SOLE AND EXCLUSIVE REMEDIES. EXCEPT AS INDICATED ABOVE, IN NO EVENT WILL HP OR ITS SUPPLIERS BE LIABLE FOR LOSS OF DATA OR FOR DIRECT, SPECIAL, INCIDENTAL, CONSEQUENTIAL (INCLUDING LOST PROFIT OR DATA), OR OTHER DAMAGE, WHETHER BASED IN CONTRACT, TORT, OR OTHERWISE. Some countries/regions, states or provinces do not allow the exclusion or limitation of incidental or consequential damages, so the above limitation or exclusion may not apply to you.

THE WARRANTY TERMS CONTAINED IN THIS STATEMENT, EXCEPT TO THE EXTENT LAWFULLY PERMITTED, DO NOT EXCLUDE, RESTRICT OR MODIFY AND ARE IN ADDITION TO THE MANDATORY STATUTORY RIGHTS APPLICABLE TO THE SALE OF THIS PRODUCT TO YOU.

Print cartridge limited warranty statement

This HP product is warranted to be free from defects in materials and workmanship.

This warranty does not apply to products that (a) have been refilled, refurbished, remanufactured or tampered with in any way, (b) experience problems resulting from misuse, improper storage, or operation outside of the published environmental specifications for the printer product or (c) exhibit wear from ordinary use.

To obtain warranty service, please return the product to place of purchase (with a written description of the problem and print samples) or contact HP customer support. At HP's option, HP will either replace products that prove to be defective or refund your purchase price.

TO THE EXTENT ALLOWED BY LOCAL LAW, THE ABOVE WARRANTY IS EXCLUSIVE AND NO OTHER WARRANTY OR CONDITION, WHETHER WRITTEN OR ORAL, IS EXPRESSED OR IMPLIED AND HP SPECIFICALLY DISCLAIMS ANY IMPLIED WARRANTIES OR CONDITIONS OF MERCHANTABILITY, SATISFACTORY QUALITY, AND FITNESS FOR A PARTICULAR PURPOSE.

TO THE EXTENT ALLOWED BY LOCAL LAW, IN NO EVENT WILL HP OR ITS SUPPLIERS BE LIABLE FOR DIRECT, SPECIAL, INCIDENTAL, CONSEQUENTIAL (INCLUDING LOST PROFIT OR DATA), OR OTHER DAMAGE, WHETHER BASED IN CONTRACT, TORT, OR OTHERWISE.

THE WARRANTY TERMS CONTAINED IN THIS STATEMENT, EXCEPT TO THE EXTENT LAWFULLY PERMITTED, DO NOT EXCLUDE, RESTRICT OR MODIFY AND ARE IN ADDITION TO THE MANDATORY STATUTORY RIGHTS APPLICABLE TO THE SALE OF THIS PRODUCT TO YOU.

End User License Agreement

PLEASE READ CAREFULLY BEFORE USING THIS SOFTWARE PRODUCT: This End-User License Agreement ("EULA") is a contract between (a) you (either an individual or the entity you represent) and (b) Hewlett-Packard Company ("HP") that governs your use of the software product ("Software"). This EULA does not apply if there is a separate license agreement between you and HP or its suppliers for the Software, including a license agreement in online documentation. The term "Software" may include (i) associated media, (ii) a user guide and other printed materials, and (iii) "online" or electronic documentation (collectively "User Documentation").

RIGHTS IN THE SOFTWARE ARE OFFERED ONLY ON THE CONDITION THAT YOU AGREE TO ALL TERMS AND CONDITIONS OF THIS EULA. BY INSTALLING, COPYING, DOWNLOADING, OR OTHERWISE USING THE SOFTWARE, YOU AGREE TO BE BOUND BY THIS EULA. IF YOU DO NOT ACCEPT THIS EULA, DO NOT INSTALL, DOWNLOAD, OR OTHERWISE USE THE SOFTWARE. IF YOU PURCHASED THE SOFTWARE BUT DO NOT AGREE TO THIS EULA, PLEASE RETURN THE SOFTWARE TO YOUR PLACE OF PURCHASE WITHIN FOURTEEN DAYS FOR A REFUND OF THE PURCHASE PRICE; IF THE SOFTWARE IS INSTALLED ON OR MADE AVAILABLE WITH ANOTHER HP PRODUCT, YOU MAY RETURN THE ENTIRE UNUSED PRODUCT.

1. THIRD PARTY SOFTWARE. The Software may include, in addition to HP proprietary software ("HP Software"), software under licenses from third parties ("Third Party Software" and "Third Party License"). Any Third Party Software is licensed to you subject to the terms and conditions of the corresponding Third Party License. Generally, the Third Party License is located in a file such as license.txt; you should contact HP support if you cannot find any Third Party License. If the Third Party Licenses include licenses that provide for the availability of source code (such as the GNU General Public License) and the corresponding source code is not included with the Software, then check the product support pages of HP's website (hp.com) to learn how to obtain such source code.

2. LICENSE RIGHTS. You will have the following rights provided you comply with all terms and conditions of this EULA:

a. Use. HP grants you a license to Use one copy of the HP Software. "Use" means installing, copying, storing, loading, executing, displaying, or otherwise using the HP Software. You may not modify the HP Software or disable any licensing or control feature of the HP Software. If this Software is provided by HP for Use with an imaging or printing product (for example, if the Software is a printer driver, firmware, or add-on), the HP Software may only be used with such product ("HP Product"). Additional restrictions on Use may appear in the User Documentation. You may not separate component parts of the HP Software for Use. You do not have the right to distribute the HP Software.

b. Copying. Your right to copy means you may make archival or back-up copies of the HP Software, provided each copy contains all the original HP Software's proprietary notices and is used only for back-up purposes.

3. UPGRADES. To Use HP Software provided by HP as an upgrade, update, or supplement (collectively "Upgrade"), you must first be licensed for the original HP Software identified by HP as eligible for the Upgrade. To the extent the Upgrade supersedes the original HP Software, you may no longer use such HP Software. This EULA applies to each Upgrade unless HP provides other terms with the Upgrade. In case of a conflict between this EULA and such other terms, the other terms will prevail.

4. TRANSFER.

a. Third Party Transfer. The initial end user of the HP Software may make a one-time transfer of the HP Software to another end user. Any transfer will include all component parts, media, User Documentation, this EULA, and if applicable, the Certificate of Authenticity. The transfer may not be an indirect transfer, such as a consignment. Prior to the transfer, the end user receiving the transferred

Software will agree to this EULA. Upon transfer of the HP Software, your license is automatically terminated.

b. Restrictions. You may not rent, lease or lend the HP Software or Use the HP Software for commercial timesharing or bureau use. You may not sublicense, assign or otherwise transfer the HP Software except as expressly provided in this EULA.

5. PROPRIETARY RIGHTS. All intellectual property rights in the Software and User Documentation are owned by HP or its suppliers and are protected by law, including applicable copyright, trade secret, patent, and trademark laws. You will not remove any product identification, copyright notice, or proprietary restriction from the Software.

6. LIMITATION ON REVERSE ENGINEERING. You may not reverse engineer, decompile, or disassemble the HP Software, except and only to the extent that the right to do so is allowed under applicable law.

7. CONSENT TO USE OF DATA. HP and its affiliates may collect and use technical information you provide in relation to (i) your Use of the Software or the HP Product, or (ii) the provision of support services related to the Software or the HP Product. All such information will be subject to HP's privacy policy. HP will not use such information in a form that personally identifies you except to the extent necessary to enhance your Use or provide support services.

8. LIMITATION OF LIABILITY. Notwithstanding any damages that you might incur, the entire liability of HP and its suppliers under this EULA and your exclusive remedy under this EULA will be limited to the greater of the amount actually paid by you for the Product or U.S. $5.00. TO THE MAXIMUM EXTENT PERMITTED BY APPLICABLE LAW, IN NO EVENT WILL HP OR ITS SUPPLIERS BE LIABLE FOR ANY SPECIAL, INCIDENTAL, INDIRECT, OR CONSEQUENTIAL DAMAGES (INCLUDING DAMAGES FOR LOST PROFITS, LOST DATA, BUSINESS INTERRUPTION, PERSONAL INJURY, OR LOSS OF PRIVACY) RELATED IN ANY WAY TO THE USE OF OR INABILITY TO USE THE SOFTWARE, EVEN IF HP OR ANY SUPPLIER HAS BEEN ADVISED OF THE POSSIBILITY OF SUCH DAMAGES AND EVEN IF THE ABOVE REMEDY FAILS OF ITS ESSENTIAL PURPOSE. Some states or other jurisdictions do not allow the exclusion or limitation of incidental or consequential damages, so the above limitation or exclusion may not apply to you.

9. U.S. GOVERNMENT CUSTOMERS. If you are a U.S. Government entity, then consistent with FAR 12.211 and FAR 12.212, Commercial Computer Software, Computer Software Documentation, and Technical Data for Commercial Items are licensed under the applicable HP commercial license agreement.

10. COMPLIANCE WITH EXPORT LAWS. You will comply with all laws, rules, and regulations (i) applicable to the export or import of the Software, or (ii) restricting the Use of the Software, including any restrictions on nuclear, chemical, or biological weapons proliferation.

11. RESERVATION OF RIGHTS. HP and its suppliers reserve all rights not expressly granted to you in this EULA.

(c) 2007 Hewlett-Packard Development Company, L.P.

Rev. 11/06

Customer support

Get telephone support, free during your warranty period, for your country/region Have the product name, serial number, date of purchase, and problem description ready.	Country/region phone numbers are on the flyer that was in the box with your product or at www.hp.com/support/.
Get 24-hour Internet support	www.hp.com/support/ljcp2020series
Get support for products used with a Macintosh computer	www.hp.com/go/macosx
Download software utilities, drivers, and electronic information	www.hp.com/go/ljcp2020series_software
Order supplies and paper	www.hp.com/go/suresupply
Order genuine HP parts or accessories	www.hp.com/buy/parts
Order additional HP service or maintenance agreements	www.hp.com/go/carepack

Repack the product

If your product needs to be moved or shipped to another location, perform the following procedure to repack it.

△ **CAUTION:** Shipping damage as a result of inadequate packing is the customer's responsibility. The product must remain upright during shipment.

Repack the product

△ **CAUTION:** It is *extremely important* to remove the print cartridges before shipping the product. Print cartridges left in the product during shipping will leak and entirely cover the product with toner.

To prevent damage to the print cartridges, avoid touching the rollers, and store them in the original packing material or so that they are not exposed to light.

1. Remove all four print cartridges and ship separately.
2. Use the original shipping container and packing material, if possible. If you have already disposed of the packing material, contact a local mailing service for information about repacking the product. HP recommends insuring the equipment for shipment.

Service information form

WHO IS RETURNING THE EQUIPMENT?		Date:
Person to contact:		Phone:
Alternate contact:		Phone:
Return shipping address:	Special shipping instructions:	
WHAT ARE YOU SENDING?		
Model name:	Model number:	Serial number:
Please attach any relevant printouts. Do NOT ship accessories (manuals, cleaning supplies, and so on) that are not required to complete the repair.		
HAVE YOU REMOVED THE PRINT CARTRIDGES?		
You must remove them before shipping the printer, unless a mechanical problem prevents you from doing so.		
[ ] Yes.	[ ] No, I cannot remove them.	
WHAT NEEDS TO BE DONE? (Attach a separate sheet if necessary.)		
1. Describe the conditions of the failure. (What was the failure? What were you doing when the failure occurred? What software were you running? Is the failure repeatable?)		
2. If the failure is intermittent, how much time elapses between failures?		
3. If the unit connected to any of the following, give the manufacturer and model number.		
Personal computer:	Modem:	Network:
4. Additional comments:		
HOW WILL YOU PAY FOR THE REPAIR?		
[ ] Under warranty	Purchase/received date:	
(Attach proof of purchase or receiving document with original received date.)		
[ ] Maintenance contract number:		
[ ] Purchase order number:		
Except for contract and warranty service, a purchase order number and/or authorized signature must accompany any request for service. If standard repair prices do not apply, a minimum purchase order is required. Standard repair prices can be obtained by contacting an HP-authorized repair center.		
Authorized signature:		Phone:
Billing address:	Special billing instructions:	

C Specifications

- Physical specifications
- Electrical specifications
- Acoustic emissions
- Environmental specifications

Physical specifications

Table C-1 Physical specifications

Product	Height	Depth	Width	Weight
Non-duplexing model	322 mm (12.7 inches)	454 mm (17.9 inches)	405 mm (15.9 inches)	19.90 kg (43.78 lb)
Duplexing model	322 mm (12.7 inches)	484 mm (19.1 inches)	400 mm (15.7 inches)	21.10 kg (46.42 lb)

Electrical specifications

⚠ **WARNING!** Power requirements are based on the country/region where the product is sold. Do not convert operating voltages. This may damage the product and void the product warranty.

Table C-2 Electrical specifications

Item	110-volt models	220-volt models
Power requirements	100 to 127 V (+/-10%) 50 to 60 Hz (+/-2 Hz)	220 to 240 V (+/-10%) 50 to 60 Hz (+/-2 Hz)
Minimum recommended circuit capacity	6.0 A	3.0 A

Table C-3 Power consumption (average, in watts)[1,4]

Product Model	Printing (21 PPM)[2,3]	Ready[2]	Sleep[2]	Off[2]
HP Color LaserJet CP2020 Series Printer	260	13	3.8	0.0

1 Values are based on preliminary data, see www.hp.com/support/ljcp2020series for current information.

2 The power consumption reflects the highest values measured for color and monochrome printing when using all standard voltages.

3 HP Color LaserJet CP2020 Series print speed is 21 pages per minute (ppm) on letter-size media and 20 ppm on A4-size media in black-and-white or color.

4 Maximum heat dissipation for all models in Ready mode = 41 BTU/Hour.

Acoustic emissions

Table C-4 HP Color LaserJet CP2020 Series[1,2]

Sound power level	Declared per ISO 9296
Printing (21 ppm)[3]	L_{WAd} = 6.4 Bels (A) [64dB (A)]
Ready	L_{WAd} = Inaudible
Sound pressure level: bystander position	**Declared per ISO 9296**
Printing (20 ppm)[3]	L_{pAm} = 67 dB (A)
Ready	L_{pAm} = Inaudible

1 Values are based on preliminary data, see www.hp.com/support/ljcp2020series for current information.

2 Configuration tested: HP Color LaserJet CP2020 Series monochrome simplex printing.

3 HP Color LaserJet CP2020 Series speed is 21/20 ppm for color printing and 21/20 ppm for monochrome printing (Letter/A4 size).

Environmental specifications

Table C-5 Operating-environment specifications

Environment	Recommended	Allowed
Temperature	15° to 27°C (59° to 80.6°F)	10° to 30°C (50° to 86°F)
Humidity	20% to 60% relative humidity (RH)	10% to 80% RH
Altitude	Not applicable	0 to 3048 m (0 to 10,000 ft)

NOTE: These values are based on preliminary data. See www.hp.com/support/ljcp2020series for current information.

D Regulatory information

- FCC regulations
- Environmental product stewardship program
- Declaration of conformity
- Country/region specific statements

FCC regulations

This equipment has been tested and found to comply with the limits for a Class B digital device, pursuant to Part 15 of the FCC rules. These limits are designed to provide reasonable protection against harmful interference in a residential installation. This equipment generates, uses, and can radiate radio frequency energy. If this equipment is not installed and used in accordance with the instructions, it may cause harmful interference to radio communications. However, there is no guarantee that interference will not occur in a particular installation. If this equipment does cause harmful interference to radio or television reception, which can be determined by turning the equipment off and on, the user is encouraged to try to correct the interference by one or more of the following measures:

- Reorient or relocate the receiving antenna.
- Increase separation between equipment and receiver.
- Connect equipment to an outlet on a circuit different from that to which the receiver is located.
- Consult your dealer or an experienced radio/TV technician.

NOTE: Any changes or modifications to the printer that are not expressly approved by HP could void the user's authority to operate this equipment.

Use of a shielded interface cable is required to comply with the Class B limits of Part 15 of FCC rules.

Environmental product stewardship program

Protecting the environment

Hewlett-Packard Company is committed to providing quality products in an environmentally sound manner. This product has been designed with several attributes to minimize impacts on our environment.

Ozone production

This product generates no appreciable ozone gas (O_3).

Power consumption

Power usage drops significantly while in Ready/Sleep mode, which saves natural resources and saves money without affecting the high performance of this product. To determine the ENERGY STAR® qualification status for this product see the Product Data Sheet or Specifications Sheet. Qualified products are also listed at:

http://www.hp.com/hpinfo/globalcitizenship/environment/productdesign/ecolabels.html

Paper use

This product's manual duplex feature (two-sided printing) and N-up printing (multiple pages printed on one page) capability can reduce paper usage and the resulting demands on natural resources.

Plastics

Plastic parts over 25 grams are marked according to international standards that enhance the ability to identify plastics for recycling purposes at the end of the product's life.

HP LaserJet print supplies

It's easy to return and recycle your HP LaserJet print cartridges that have reached estimated end of life —free of charge—with HP Planet Partners. Multilingual program information and instructions are included in every new HP LaserJet print cartridge and supplies package. You help reduce the toll on the environment further when you return multiple cartridges together rather than separately.

HP is committed to providing inventive, high-quality products and services that are environmentally sound, from product design and manufacturing to distribution, customer use and recycling. When you participate in the HP Planet Partners program, we ensure your HP LaserJet print cartridges are recycled properly, processing them to recover plastics and metals for new products and diverting millions of tons of waste from landfills. Since this cartridge is being recycled and used in new materials, it will not be returned to you. Thank you for being environmentally responsible!

NOTE: Use the return label to return original HP LaserJet print cartridges only. Please do not use this label for HP inkjet cartridges, non-HP cartridges, refilled or remanufactured cartridges or warranty returns. For information about recycling your HP inkjet cartridges please go to http://www.hp.com/recycle.

Return and recycling instructions

United States and Puerto Rico

The enclosed label in the HP LaserJet toner cartridge box is for the return and recycling of one or more HP LaserJet print cartridges after use. Please follow the applicable instructions below.

Multiple returns (two to eight cartridges)

1. Package each HP LaserJet print cartridge in its original box and bag.
2. Tape up to eight single boxes together using strapping or packaging tape (up to 70 lbs).
3. Use a single pre-paid shipping label.

OR

1. Use your own suitable box, or request a free bulk collection box from the http://www.hp.com/recycle or 1-800-340-2445 (holds up to eight HP LaserJet print cartridges).
2. Use a single pre-paid shipping label.

Single returns

1. Package the HP LaserJet print cartridge in its original bag and box.
2. Place the shipping label on the front of the box.

Shipping

For all HP LaserJet print cartridge recycling returns, give the package to UPS during your next delivery or pickup, or take it to an authorized UPS drop-off center. For the location of your local UPS drop-off center, call 1-800-PICKUPS or visit http://www.ups.com. If you are returning via USPS label, give the package to a U.S. Postal Service carrier or drop off at a U.S.Postal Service Office. For more information, or to order additional labels or boxes for bulk returns, visit http://www.hp.com/recycle or call 1-800-340-2445. Requested UPS pickup will be charged normal pickup rates. Information subject to change without notice.

Non-US returns

To participate in HP Planet Partners return and recycling program, just follow the simple directions in the recycling guide (found inside the packaging of your new printer supply item) or visit http://www.hp.com/recycle. Select your country/region for information on how to return your HP LaserJet printing supplies.

Paper

This product is capable of using recycled papers when the paper meets the guidelines outlined in the *HP LaserJet Printer Family Print Media Guide*. This product is suitable for the use of recycled paper according to EN12281:2002.

Material restrictions

This HP product does not contain added mercury.

This HP product does not contain a battery.

Disposal of waste equipment by users in private households in the European Union

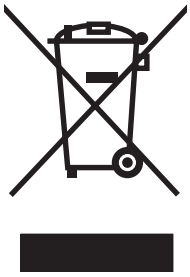

This symbol on the product or on its packaging indicates that this product must not be disposed of with your other household waste. Instead, it is your responsibility to dispose of your waste equipment by handing it over to a designated collection point for the recycling of waste electrical and electronic equipment. The separate collection and recycling of your waste equipment at the time of disposal will help to conserve natural resources and ensure that it is recycled in a manner that protects human health and the environment. For more information about where you can drop off your waste equipment for recycling, please contact your local city office, your household waste disposal service or the shop where you purchased the product.

Material Safety Data Sheet (MSDS)

Material Safety Data Sheets (MSDS) for supplies containing chemical substances (for example, toner) can be obtained by contacting the HP Web site at www.hp.com/go/msds or www.hp.com/hpinfo/globalcitizenship/environment.

For more information

To obtain information about these environmental topics:

- Product environmental profile sheet for this and many related HP products
- HP's commitment to the environment
- HP's environmental management system
- HP's end-of-life product return and recycling program
- Material Safety Data Sheets

Visit www.hp.com/go/environment or www.hp.com/hpinfo/globalcitizenship/environment.

Declaration of conformity

according to ISO/IEC 17050-1 and EN 17050-1; DoC#: BOISB-0701–00–rel. 1.0

Manufacturer's Name:	Hewlett-Packard Company
Manufacturer's Address:	11311 Chinden Boulevard, Boise, Idaho 83714-1021, USA

declares, that the product

Product Name:	HP Color LaserJet CP2020 Series
Regulatory Model:[2)]	BOISB-0701-00
	Including: CB500A— Optional 250-Sheet Input Tray
Product Options:	All
Toner Cartridges:	CC530A, CC531A, CC532A, CC533A

conforms to the following Product Specifications:

SAFETY:	IEC 60950-1:2001 / EN60950-1: 2001 +A11 IEC 60825-1:1993 +A1+A2 / EN 60825-1:1994 +A1 +A2 (Class 1 Laser/LED Product) GB4943-2001
EMC:	CISPR22:2005 / EN55022:2006 - Class B[1)] EN 61000-3-2:2000 +A2 EN 61000-3-3:1995 +A1 EN 55024:1998 +A1 +A2 FCC Title 47 CFR, Part 15 Class B / ICES-003, Issue 4 GB9254-1998, GB17625.1-2003

Supplementary Information:

The product herewith complies with the requirements of the EMC Directive 2004/108/EEC and the Low Voltage Directive 2006/95/EC, and carries the CE-Marking CE accordingly.

This Device complies with Part 15 of the FCC Rules. Operation is subject to the following two Conditions: (1) this device may not cause harmful interference, and (2) this device must accept any interference received, including interference that may cause undesired operation.

1) The product was tested in a typical configuration with Hewlett-Packard Personal Computer Systems.

2) For regulatory purposes, these products are assigned a Regulatory model number. This number should not be confused with the product name or the product number(s).

Boise, Idaho 83713, USA

December, 2007

For Regulatory Topics Only:

European Contact	Your Local Hewlett-Packard Sales and Service Office or Hewlett-Packard Gmbh, Department HQ-TRE / Standards Europe, Herrenberger Strasse 140, D-71034 Böblingen, Germany, (FAX+49-7031-14-3143), http://www.hp.com/go/certificates
USA Contact	Product Regulations Manager, Hewlett-Packard Company, PO Box 15, Mail Stop 160, Boise, ID 83707-0015, USA, (Phone: 208-396-6000)

Country/region specific statements

Laser safety

The Center for Devices and Radiological Health (CDRH) of the U.S. Food and Drug Administration has implemented regulations for laser products manufactured since August 1, 1976. Compliance is mandatory for products marketed in the United States. The device is certified as a “Class 1” laser product under the U.S. Department of Health and Human Services (DHHS) Radiation Performance Standard according to the Radiation Control for Health and Safety Act of 1968. Since radiation emitted inside the device is completely confined within protective housings and external covers, the laser beam cannot escape during any phase of normal user operation.

⚠ **WARNING!** Using controls, making adjustments, or performing procedures other than those specified in this user guide may result in exposure to hazardous radiation.

Canadian DOC regulations

Complies with Canadian EMC Class B requirements.

« Conforme à la classe B des normes canadiennes de compatibilité électromagnétiques. « CEM ». »

VCCI statement (Japan)

この装置は、情報処理装置等電波障害自主規制協議会（ＶＣＣＩ）の基準に基づくクラスＢ情報技術装置です。この装置は、家庭環境で使用することを目的としていますが、この装置がラジオやテレビジョン受信機に近接して使用されると、受信障害を引き起こすことがあります。
取扱説明書に従って正しい取り扱いをして下さい。

Power cord statement (Japan)

製品には、同梱された電源コードをお使い下さい。
同梱された電源コードは、他の製品では使用出来ません。

EMI statement (Korea)

B급 기기 (가정용 정보통신기기)

이 기기는 가정용으로 전자파적합등록을 한 기기로서
주거지역에서는 물론 모든지역에서 사용할 수 있습니다.

Laser statement for Finland

Luokan 1 laserlaite

Klass 1 Laser Apparat

HP Color LaserJet CP2020 Series, laserkirjoitin on käyttäjän kannalta turvallinen luokan 1 laserlaite. Normaalissa käytössä kirjoittimen suojakotelointi estää lasersäteen pääsyn laitteen ulkopuolelle. Laitteen turvallisuusluokka on määritetty standardin EN 60825-1 (1994) mukaisesti.

VAROITUS !

Laitteen käyttäminen muulla kuin käyttöohjeessa mainitulla tavalla saattaa altistaa käyttäjän turvallisuusluokan 1 ylittävälle näkymättömälle lasersäteilylle.

VARNING !

Om apparaten används på annat sätt än i bruksanvisning specificerats, kan användaren utsättas för osynlig laserstrålning, som överskrider gränsen för laserklass 1.

HUOLTO

HP Color LaserJet CP2020 Series - kirjoittimen sisällä ei ole käyttäjän huollettavissa olevia kohteita. Laitteen saa avata ja huoltaa ainoastaan sen huoltamiseen koulutettu henkilö. Tällaiseksi huoltotoimenpiteeksi ei katsota väriainekasetin vaihtamista, paperiradan puhdistusta tai muita käyttäjän käsikirjassa lueteltuja, käyttäjän tehtäväksi tarkoitettuja ylläpitotoimia, jotka voidaan suorittaa ilman erikoistyökaluja.

VARO !

Mikäli kirjoittimen suojakotelo avataan, olet alttiina näkymättömällelasersäteilylle laitteen ollessa toiminnassa. Älä katso säteeseen.

VARNING !

Om laserprinterns skyddshölje öppnas då apparaten är i funktion, utsättas användaren för osynlig laserstrålning. Betrakta ej strålen. Tiedot laitteessa käytettävän laserdiodin säteilyominaisuuksista: Aallonpituus 775-795 nm Teho 5 m W Luokan 3B laser.

Substances Table (China)

根据中国电子信息产品污染控制管理办法的要求而出台

Table D-1 有毒有害物质表

部件名称	有毒有害物质和元素					
	铅 (Pb)	汞 (Hg)	镉 (Cd)	六价铬 (Cr(VI))	多溴联苯 (PBB)	多溴二苯醚 (PBDE)
打印引擎	X	O	X	X	O	O
控制面板	O	O	O	O	O	O
塑料外壳	O	O	O	O	O	O
格式化板组件	X	O	O	O	O	O
碳粉盒	X	O	O	O	O	O

O:表示在此部件所用的所有同类材料中，所含的此有毒或有害物质均低于 SJ/T11363-2006 的限制要求。

X:表示在此部件所用的所有同类材料中，至少一种所含的此有毒或有害物质高于 SJ/T11363-2006 的限制要求。

NOTE: 引用的“环保使用期限”是根据在正常温度和湿度条件下操作使用产品而确定的。

Index

Symbols/Numerics

<Color> in wrong position error message 98

A

accessibility features 3
accessories
  ordering 125
acoustic specifications 138
advanced printing options
  Windows 56
alerts
  viewing with HP Toolbox FX 71
Alerts tab, HP Toolbox FX 71
alerts, setting up 70
alternative letterhead mode 56
altitude specifications 138
anticounterfeit supplies 80
archive setting 14
auto continue
  use 81
Automatic crossover
  setting 40
automatic crossover, setting 15

B

background, gray 112
bands, troubleshooting 112
batteries included 142
bin, output
  capacity 2
  jams, clearing 107
  legal extension 4
  locating 4
black and white printing
  troubleshooting 115
blank pages, troubleshooting 119
BOOTP 41
buttons, control panel 8

C

cables
  connecting network 33
  connecting USB 33
  USB, troubleshooting 119
calibrating color 12, 75, 118
Canadian DOC regulations 145
canceling a print job 54
cancelling a print job 54
capacity
  output bin 2
cartridges
  error messages 100
  low or out, settings 12
  non-HP 80
  order message 99
  recycling 141
  replace message 99, 100
  replacing 82
  status, viewing with HP Toolbox FX 70
  storage 80
  supplies status page 10
  using when out of toner 81
  warranty 129
cartridges, print
  Macintosh status 32
characters, troubleshooting 113
cleaning 90
color
  adjusting 60
  calibrating 12, 75, 118
  Edge Control 61
  halftone options 60
  HP ImageREt 3600 64
  Macintosh settings 32
  managing 60
  matching 62
  Microsoft Office Basic Colors palette 62
  Neutral Grays 61
  print in grayscale 60
  printed vs. monitor 62
  restricting 11
  sRGB 61, 64
  troubleshooting 115
color themes 61
color usage log 10
colored text
  print as black 56
configuration page 10, 38
configure the product, Macintosh 29
connecting
  network 33
  USB 33
contrast
  display, control panel 12
  print density 75
control panel
  automatic crossover, setting 40
  display contrast 12
  language 11
  lights and buttons 8
  locating 4
  menu map, printing 10
  menus 9
  messages, troubleshooting 95
  Network config. menu 15
  network services, setting, IPv4, IPv6 40
  Reports menu 10
  restore defaults, network settings 41
  Service menu 14
  settings 22, 28

show IP address, setting 40
System Setup menu 11
copies, number of
Windows 56
counterfeit supplies 80
country/region of origin 5
cover pages 30, 55
creases, troubleshooting 114
crooked pages 114
curl, paper
settings 14
curled media 114
custom-size paper settings
Macintosh 30
customer support
online 132
service information form 134

D

declaration of conformity 144
default settings, restoring 14
demo page 10
density settings 75
device discovery over network“ 36
device error message 98
Device Settings tab, HP ToolboxFX 73
device status
Macintosh Services tab 32
DHCP 41
DIMMs
installing 86
verifying installation 90
display contrast, setting 12
disposal, end-of-life 142
documentation 125
dots per inch (dpi)
HP ImageREt 3600 64
specifications 2
dots, troubleshooting 111
double-sided printing 32
dpi (dots per inch)
HP ImageREt 3600 64
specifications 2
drivers
included 2
Macintosh settings 30
Macintosh, troubleshooting 121
presets (Macintosh) 30
settings 22, 23, 28
shortcuts (Windows) 55
supported 19
universal 20
usage page 10
Windows, opening 55
duplex printing
Windows 56

E

E-mail alerts tab, HP ToolboxFX 71
e-mail alerts, setting up 70
Edge Control 61
electrical specifications 137
embedded Web server
accessing 77
Networking tab 79
Settings tab 78
Status tab 78
end-of-life disposal 142
Energy Star compliance 2
engine, cleaning 90
environment specifications 138
environmental stewardship program 141
EPS files, troubleshooting 122
error messages, control panel 95
errors
software 120
European Union, waste disposal 143
Event log 70

F

factory defaults, restoring 14
faded print 111
fan error message 97
features 2
Finnish laser safety statement 146
firmware
about upgrades 91
first page
use different paper 30
fonts
DIMMs, installing 86
EPS files, troubleshooting 122
lists, printing 10
fraud hotline 80
front door, locating 4
fuser
errors 96
jams, clearing 105

G

gateways 42
gray background, troubleshooting 112
grayscale
troubleshooting 115
grayscale printing 60

H

Help tab, HP ToolboxFX 72
HP Customer Care 132
HP fraud hotline 80
HP ImageREt 3600 64
HP Toolbox FX
Alerts tab 71
Status tab 70
HP ToolboxFX
about 69
density settings 75
description 26
Device Settings tab 73
downloading 26
E-mail alerts tab 71
Help tab 72
Microsoft Office Basic Colors palette, printing 62
Network Settings tab 76
opening 69
Print Quality Troubleshooting page 117
Product information tab 71
supported browsers 26
supported operating systems 26
System Setup tab 75
HP Universal Print Driver 20
HP Web Jetadmin 25
humidity specifications 138

I

image quality
archive setting 14
HP ImageREt 3600 64
HP ToolboxFX settings 75
print, troubleshooting 110

ImageREt 3600 2, 64
information pages
configuration 38
network configuration 38
install supplies message 98
interface ports
types included 2
invalid driver error message 98
IP address
BOOTP 41
Macintosh, troubleshooting 121
overview 41
protocols supported 36

J
jam recovery 102
jams
common causes of 101
locations 101
output bin, clearing 107
paper path, clearing 105
tracking number of 10
jams <location>
error messages 98
jams tray #
error messages 98
Japanese VCCI statement 145
Jetadmin, HP Web 25

K
Korean EMI statement 145

L
landscape orientation
setting, Windows 56
language, control panel 11
laser safety statements 145, 146
letterhead paper, loading 56
license, software 130
light print, troubleshooting 111
lightness
faded print, troubleshooting 111
lights, control panel 8
lines, troubleshooting
printed pages 112
loading
media 50
paper 50
loading media
error messages 98
loose toner, troubleshooting 112

M
Macintosh
configure the product software 29
driver settings 28, 30
drivers, troubleshooting 121
resize documents 30
software 28
support 132
supported operating systems 28
troubleshooting 121
USB card, troubleshooting 122
Macintosh driver settings
custom-size paper 30
Services tab 32
watermarks 31
matching colors 62
material restrictions 142
Material Safety Data Sheet (MSDS) 143
media
curl settings 14
curled, troubleshooting 114
custom-size, Macintosh settings 30
default settings 11, 74
first page 30
HP ToolboxFX settings 73
pages per sheet 31
specification guide 125
supported sizes 45
wrinkled 114
media jams. *See* jams
memory
adding 86
enabling 90
error messages 99
included 2
installing 86
specifications 2
verifying installation 90
menus, control panel
map, printing 10
Network config. 15
Reports 10
Service 14
System Setup 11
using 9
mercury-free product 142
messages, control panel 95
Microsoft Office Basic Colors palette, printing 62
misprint error message 99
model number 5
multiple pages per sheet
Windows 56

N
n-up printing
Windows 56
network
operating systems supported 34
product discovery 36
protocols supported 36
Network config. menu 15
network configuration page 38
Network port
connecting 33
locating 4
type included 2
Network services
setting, IPv4, IPv6 40
Network Settings tab, HP ToolboxFX 76
Networking tab, embedded Web server 79
networks
configuration page 10
configuring 38
DHCP 41
embedded Web server, accessing 77
gateways 42
IP address 39, 41
models supporting 2
password, setting 71
settings 15
settings report 10
subnets 42
TCP/IP 41
Neutral Grays 61
noise specifications 138
non-HP supplies 80

O

on/off switch 4
online support 132
operating environment specifications 138
operating systems supported 2, 18, 28
operating systems, networks 34
order supplies message 99
ordering supplies
  Web sites 125
orientation
  setting, Windows 56
output bin
  capacity 2
  jams, clearing 107
  locating 4
output quality
  archive setting 14
  HP ImageREt 3600 64
  HP ToolboxFX settings 75
  print, troubleshooting 110

P

page count 10
page order, changing 56
page too complex error message 99
pages
  blank 119
  not printing 119
  printing slowly 119
  skewed 114
pages per minute 2
pages per sheet
  Windows 56
paper
  covers, using different paper 55
  curl settings 14
  curled, troubleshooting 114
  custom size, selecting 55
  custom-size, Macintosh settings 30
  default settings 11, 74
  first and last pages, using different paper 55
  first page 30
  HP ToolboxFX settings 75
  pages per sheet 31
  size, selecting 55
  specification guide 125
  supported sizes 45
  type, selecting 55
  wrinkled 114
paper jams. *See* jams
paper path
  jams, clearing 105
part numbers 125
password, network 71
pausing a print job 54
PCL drivers
  universal 20
PCL font list 10
PCL settings, HP ToolboxFX 74
physical specifications 136
portrait orientation
  setting, Windows 56
ports
  troubleshooting
    Macintosh 122
  types included 2
PostScript settings, HP ToolboxFX 74
power connection, locating 5
power specifications 137
power switch 4
presets (Macintosh) 30
print cartridges
  error messages 100
  low or out, settings 12
  Macintosh status 32
  non-HP 80
  order message 99
  recycling 141
  replace message 99, 100
  replacing 82
  status, viewing with HP Toolbox FX 70
  storage 80
  supplies status page 10
  using when out of toner 81
  warranty 129
print cartridges, accessing 4
print density settings 75
print media
  supported 45
print on both sides
  Windows 56
print quality
  archive setting 14
  HP ImageREt 3600 64
  HP ToolboxFX settings 75
  troubleshooting 110
  troubleshooting page 117
printing
  troubleshooting 119
priority, settings 22, 28
Product information tab, HP ToolboxFX 71
product registration 76
production code 5
protocols, networks 36
PS Emulation drivers 19
PS font list 10

Q

quality
  archive setting 14
  HP ImageREt 3600 64
  HP ToolboxFX settings 75
  print, troubleshooting 110
Quick Sets 55

R

rear door, locating 5
recycling
  HP printing supplies returns and environmental program 142
registration, product 76
remote firmware upgrades
  about 91
repacking the product 133
repetitive defects, troubleshooting 115
replace supplies message 99, 100
replacement parts, and supplies 125
replacing print cartridges 82
Reports menu 10
reports, product
  configuration page 38
  network configuration page 38
resize documents
  Macintosh 30
  Windows 55
resolution
  features 2

HP ImageREt 3600 64
specifications 2
Restore defaults
network settings 41
restoring default settings 14
revision level 5
RGB settings 61, 64

S

safety statements 145, 146
scale documents
Macintosh 30
Windows 55
scatter, troubleshooting 114
serial number 5
service
HP ToolboxFX settings 76
information form 134
repacking the product 133
service error message 97
Service menu 14
service page 10
Services tab
Macintosh 32
settings
color 64
configuration page 38
driver presets (Macintosh) 30
drivers 23, 28
HP ToolboxFX 73
network configuration page 38
network report 10
priority 22, 28
restoring defaults 14
System Setup menu 11
Settings tab, embedded Web server 78
shipping lock error message 100
shipping the product 133
shortcuts 55
Show IP address
setting 40
size specifications, product 136
sizes, media
default, setting 11
skewed pages 114
smeared toner, troubleshooting 112
software
embedded Web server 25
HP ToolboxFX 26, 69
HP Web Jetadmin 25
Macintosh 28
problems 120
settings 22, 28
software license agreement 130
supported operating systems 18, 28
Windows 17, 26
spare parts 125
special media
guidelines 49
special paper
guidelines 49
specifications
acoustic 138
documentation 125
electrical 137
environment 138
features 2
model and serial number 5
physical 136
specks, troubleshooting 111
speed
print specifications 2
spots, troubleshooting 111
sRGB settings 61, 64
status
alerts, HP Toolbox FX 70
Macintosh services tab 32
supplies, printing report 10
viewing with HP Toolbox FX 70
Status tab, embedded Web server 78
Status tab, HP Toolbox FX 70
stopping a print job 54
storing
print cartridges 80
product 138
streaks, troubleshooting 112
subnet mask 42
subnets 42
supplies
counterfeit 80
error messages 100
low or out, settings 12
non-HP 80
order message 99
ordering 76, 125
recycling 141
replace message 99, 100
shipping lock error message 100
status, viewing with HP Toolbox FX 70
wrong position error message 98
supplies status page 10
supply-status, Services tab
Macintosh 32
Windows 56
support
online 56, 76, 132
service information form 134
supported media 45
System Setup menu 11
System Setup tab, HP ToolboxFX 75

T

TCP/IP
configuring 41
operating systems supported 34
overview 41
protocols supported 36
settings 15
technical support
online 132
service information form 134
temperature specifications 138
text, troubleshooting
misformed characters 113
toner
loose, troubleshooting 112
scatter, troubleshooting 114
smeared, troubleshooting 112
specks, troubleshooting 111
toner cartridges. *See* print cartridges
ToolboxFX,HP 69
trapping 61
tray 1
jams, clearing 102
loading 50

locating 4
settings 11
tray 2
capacity 4
jams, clearing 103
loading 50
locating 4
settings 11
tray 3
capacity 4
jams, clearing 104
locating 4
trays
capacities 2
double-sided printing 32
included 2
jams, clearing 103, 104
load error messages 98
locating 4
settings 11, 74
troubleshooting
blank pages 119
calibration 118
checklist 94
color 115
configuration page, printing 38
control panel messages 95
curled media 114
EPS files 122
faded print 111
jams 101
lines, printed pages 112
loose toner 112
Macintosh problems 121
network configuration page, printing 38
pages not printing 119
pages printing slowly 119
print quality 110, 117
repetitive defects 115
skewed pages 114
text 113
toner scatter 114
toner smear 112
toner specks 111
USB cables 119
wrinkles 114
two-sided printing
Windows 56
types, media
HP ToolboxFX settings 75

U

universal print driver 20
upgrade firmware
about 91
usage page 10
USB port
connecting 33
locating 4
speed settings 14
troubleshooting 119
troubleshooting Macintosh 122
type included 2

V

vertical lines, troubleshooting 112

W

warranty
license 130
print cartridges 129
product 128
watermarks
Windows 55
wavy paper, troubleshooting 114
Web sites
customer support 132
fraud reports 80
Macintosh customer support 132
Material Safety Data Sheet (MSDS) 143
ordering supplies 125
universal print driver 20
Windows
driver settings 23
drivers supported 19
software components 26
supported operating systems 18
universal print driver 20
wrinkles, troubleshooting 114

© 2008 Hewlett-Packard Development Company, L.P.

www.hp.com

CB493-90908