HP LaserJet P3010 Series Printers User Guide

Product use

Product management

Product maintenance

Problem solving

Additional product information:

www.hp.com/support/ljp3010series

Downloaded from www.Manualslib.com manuals search engine

Downloaded from www.Manualslib.com manuals search engine

HP LaserJet P3010 Series Printers
User Guide

Downloaded from www.Manualslib.com manuals search engine

Copyright and License

© 2009 Copyright Hewlett-Packard Development Company, L.P.

Reproduction, adaptation, or translation without prior written permission is prohibited, except as allowed under the copyright laws.

The information contained herein is subject to change without notice.

The only warranties for HP products and services are set forth in the express warranty statements accompanying such products and services. Nothing herein should be construed as constituting an additional warranty. HP shall not be liable for technical or editorial errors or omissions contained herein.

Part number: CE524-90910

Edition 1, 4/2009

Trademark Credits

Adobe®, Acrobat®, and PostScript® are trademarks of Adobe Systems Incorporated.

Intel® Core™ is a trademark of Intel Corporation in the U.S. and other countries.

Java™ is a US trademark of Sun Microsystems, Inc.

Microsoft®, Windows®, and Windows®XP are U.S. registered trademarks of Microsoft Corporation.

Windows Vista® is either a registered trademark or trademark of Microsoft Corporation in the United States and/or other countries.

UNIX® is a registered trademark of The Open Group.

ENERGY STAR and the ENERGY STAR mark are registered U.S. marks.

Downloaded from www.Manualslib.com manuals search engine

Table of contents

1 Product basics

Conventions used in this guide 2
Product comparison 3
Environmental features 5
Product features 6
Product views 8
Front view 8
Rear view 9

2 Control panel

Control-panel layout 12
Use the control-panel menus 14
Use the menus 14
Show Me How menu 15
Retrieve job menu 16
Information menu 18
Paper handling menu 19
Manage supplies menu 20
Configure device menu 21
Printing menu 21
PCL sub-menu 22
Print Quality menu 23
System setup menu 26
I/O menu 30
Embedded Jetdirect and EIO <X> Jetdirect menus 30
Resets menu 36
Diagnostics menu 38
Service menu 39

3 Software for Windows

Supported operating systems for Windows 42
Supported printer drivers for Windows 43
HP Universal Print Driver (UPD) 44
UPD installation modes 44

Downloaded from www.Manualslib.com manuals search engine

Select the correct printer driver for Windows 45
Priority for print settings 46
Change printer-driver settings for Windows 47
Remove software for Windows 48
Supported utilities for Windows 49
HP Web Jetadmin 49
Embedded Web server 49
HP Easy Printer Care 50
Software for other operating systems 51

4 Use the product with Macintosh
Software for Macintosh 54
Supported operating systems for Macintosh 54
Supported printer drivers for Macintosh 54
Remove software from Macintosh operating systems 54
Priority for print settings for Macintosh 54
Change printer-driver settings for Macintosh 56
Software for Macintosh computers 57
HP Printer Utility 57
Open the HP Printer Utility 57
HP Printer Utility features 58
Supported utilities for Macintosh 58
Embedded Web server 58
Use features in the Macintosh printer driver 59
Create and use printing presets in Macintosh 59
Resize documents or print on a custom paper size 59
Print a cover page 59
Use watermarks 60
Print multiple pages on one sheet of paper in Macintosh 60
Print on both sides of the page (duplex printing) 61
Store jobs 61
Use the Services menu 62

5 Connectivity
USB connection 64
Network configuration 65
Supported network protocols 65
Configure the network product 67
View or change network settings 67
Set or change the network password 67
Manually configure IPv4 TCP/IP parameters from the control panel 68
Manually configure IPv6 TCP/IP parameters from the control panel 69
Disable network protocols (optional) 70

Downloaded from www.Manualslib.com manuals search engine

Disable IPX/SPX, AppleTalk, or DLC/LLC 70
Link speed and duplex settings 71

6 Paper and print media

Understand paper and print media use 74
Supported paper and print media sizes 75
Custom paper sizes 77
Supported paper and print media types 78
Tray and bin capacity 79
Special paper or print media guidelines 80
Load trays 81
Paper orientation for loading trays 81
Load Tray 1 82
Load Tray 2 or an optional 500-sheet tray 84
Configure trays 87
Configure a tray when loading paper 87
Configure a tray to match print job settings 87
Configure a tray by using the Paper Handling menu 87
Select the paper by source, type, or size 88
Source 88
Type and size 88
Use paper output options 89
Print to the top (standard) output bin 89
Print to the rear output bin 89

7 Use product features

Economy settings 92
EconoMode 92
Sleep delay 93
Set sleep delay 93
Disable or enable sleep mode 93
Wake time 94
Set the real-time clock 94
Set the wake time 94
Use job-storage features 96
Create a stored job 96
Print a stored job 96
Delete a stored job 97
Walk-up USB printing 98

8 Print tasks

Cancel a print job 100
Stop the current print job from the control panel 100

Downloaded from www.Manualslib.com manuals search engine

Stop the current print job from the software program 100
Use features in the Windows printer driver 101
Open the printer driver 101
Use printing shortcuts 101
Set paper and quality options 102
Set document effects 102
Set document finishing options 103
Set job storage options 104
Obtain support and product-status information 104
Set advanced printing options 105

9 Manage and maintain the product

Print the information and show-me-how pages 108
Use the HP Easy Printer Care software 110
Open the HP Easy Printer Care software 110
HP Easy Printer Care software sections 111
Use the embedded Web server 113
Open the embedded Web server by using a network connection 113
Embedded Web server sections 114
Use HP Web Jetadmin software 116
Use security features 117
IP Security 117
Secure the embedded Web server 117
Secure Disk Erase 117
Data affected 118
Additional Information 118
HP Encrypted High Performance hard disks 118
Hardware integration pocket 118
Secure stored jobs 118
Lock the control panel menus 119
Lock the formatter 120
Manage supplies 121
Print-cartridge storage 121
HP policy on non-HP print cartridges 121
HP fraud hotline and Web site 121
Supplies life 121
Replace supplies and parts 122
Supply replacement guidelines 122
Change the print cartridge 122
Install memory, internal USB devices, and external I/O cards 126
Overview 126
Install memory 126
Install product memory 126

Downloaded from www.Manualslib.com manuals search engine

Check DIMM installation 130
Save resources (permanent resources) 130
Enable memory for Windows 131
Install internal USB devices 132
Install EIO cards 135
Clean the product 137
Clean the exterior 137
Clean the paper path 137
Upgrade the firmware 138
Determine the current firmware version 138
Download new firmware from the HP Web site 138
Transfer the new firmware to the product 138
Use the flash executable file to update the firmware 138
Use FTP to upload the firmware through a browser 139
Use FTP to upgrade the firmware on a network connection 139
Use HP Web Jetadmin to upgrade the firmware 140
Use Microsoft Windows commands to upgrade the firmware 140
Upgrade the HP Jetdirect firmware 140

10 Solve problems

Solve general problems 144
Troubleshooting checklist 144
Factors that affect product performance 145
Restore factory settings 146
Interpret control-panel messages 147
Control-panel message types 147
Control-panel messages 147
Jams 162
Common causes of jams 162
Clear jams 163
Clear jams from Tray 1 163
Clear jams from Tray 2 or an optional 500-sheet tray 164
Clear jams from the top cover 167
Clear jams from the rear door and the fuser area 169
Clear jams from the duplexer 172
Jam recovery 176
Paper-handling problems 177
Product feeds multiple sheets 177
Product feeds incorrect page size 177
Product pulls from incorrect tray 178
Paper does not feed automatically 178
Paper does not feed from Tray 2, 3, or 4 179
Transparencies or glossy paper will not feed 179

Downloaded from www.Manualslib.com manuals search engine

Envelopes jam or will not feed in the product 180
Output is curled or wrinkled 180
Product does not duplex or duplexes incorrectly 181
Solve print-quality problems 182
Print-quality problems associated with paper 182
Print-quality problems associated with the environment 182
Print-quality problems associated with jams 182
Image defect examples 183
Repetitive defects ruler 188
Solve performance problems 189
Solve connectivity problems 190
Solve direct-connect problems 190
Solve network problems 190
Solve walk-up USB printing problems 191
Product software problems 193
Solve common Windows problems 194
Solve common Macintosh problems 195

Appendix A Supplies and accessories

Order parts, accessories, and supplies 200
Part numbers 201
Paper-handling accessories 201
Print cartridges 201
Memory 201
Cables and interfaces 202

Appendix B Service and support

Hewlett-Packard limited warranty statement 204
HP's Premium Protection Warranty: LaserJet print cartridge limited warranty statement 205
End User License Agreement 206
Customer self-repair warranty service 208
Customer support 209
Repack the product 210
Service information form 211

Appendix C Specifications

Physical specifications 214
Power consumption, electrical specifications, and acoustic emissions 214
Operating environment 214

Appendix D Regulatory information

FCC regulations 216
Environmental product stewardship program 217

Downloaded from www.Manualslib.com manuals search engine

Protecting the environment 217
Ozone production 217
Power consumption 217
Toner consumption 217
Paper use 217
Plastics 217
HP LaserJet print supplies 217
Return and recycling instructions 218
United States and Puerto Rico 218
Multiple returns (more than one cartridge) 218
Single returns 218
Shipping 218
Non-U.S. returns 218
Paper 218
Material restrictions 219
Disposal of waste equipment by users in private households in the European Union 219
Chemical substances 219
Material Safety Data Sheet (MSDS) 220
For more information 220
Declaration of conformity 221
Safety statements 222
Laser safety 222
Canadian DOC regulations 222
VCCI statement (Japan) 222
Power cord statement (Japan) 222
EMC statement (Korea) 222
Laser statement for Finland 223
Substances Table (China) 224

Index 225

Downloaded from www.Manualslib.com manuals search engine

Downloaded from www.Manualslib.com manuals search engine

1 Product basics

- Conventions used in this guide
- Product comparison
- Environmental features
- Product features
- Product views

Downloaded from www.Manualslib.com manuals search engine

Conventions used in this guide

TIP: Tips provide helpful hints or shortcuts.

NOTE: Notes provide important information to explain a concept or to complete a task.

CAUTION: Cautions indicate procedures that you should follow to avoid losing data or damaging the product.

WARNING! Warnings alert you to specific procedures that you should follow to avoid personal injury, catastrophic loss of data, or extensive damage to the product.

Downloaded from www.Manualslib.com manuals search engine

Product comparison

HP LaserJet P3015 printer (base model) CE525A 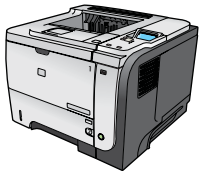	• Prints up to 42 pages per minute (ppm) on Letter size paper and 40 ppm on A4 size paper • Contains 96 megabytes (MB) of random access memory (RAM). Expandable to 1 GB. • Tray 1 holds up to 100 sheets • Tray 2 holds up to 500 sheets • 250-sheet face-down output bin • 50-sheet face-up output bin • 4-line graphical control-panel display • Hi-speed USB 2.0 port • USB port on the front of the product for walk-up printing • Enhanced input/output (EIO) slot • One open dual inline memory module (DIMM) slot
HP LaserJet P3015d printer CE526A 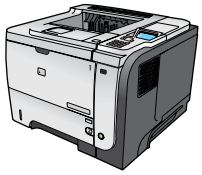	Has the same features as the HP LaserJet P3015 printer, with the following differences: • 10-key numeric keypad on the control panel • Automatic two-sided (duplex) printing • Contains 128 MB RAM. Expandable to 1 GB • Hardware integration pocket for installing third-party security devices
HP LaserJet P3015n printer CE527A 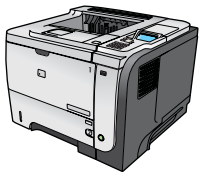	Has the same features as the HP LaserJet P3015 printer, with the following differences: • 10-key numeric keypad on the control panel • Embedded HP Jetdirect networking • Contains 128 MB RAM. Expandable to 1 GB • Hardware integration pocket for installing third-party security devices

Downloaded from www.Manualslib.com manuals search engine

HP LaserJet P3015dn printer CE528A 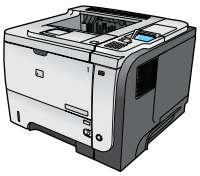	Has the same features as the HP LaserJet P3015 printer, with the following differences: • 10-key numeric keypad on the control panel • Automatic two-sided (duplex) printing • Embedded HP Jetdirect networking • Contains 128 MB RAM. Expandable to 1 GB • Hardware integration pocket for installing third-party security devices
HP LaserJet P3015x printer CE529A 	Has the same features as the HP LaserJet P3015 printer, with the following differences: • 10-key numeric keypad on the control panel • Automatic two-sided (duplex) printing • Embedded HP Jetdirect networking • Contains 128 MB RAM. Expandable to 1 GB • One additional 500-sheet input tray (Tray 3) • Hardware integration pocket for installing third-party security devices

Downloaded from www.Manualslib.com manuals search engine

Environmental features

Duplex	Save paper by using duplex printing as your default print setting.
Recycling	Reduce waste by using recycled paper. Recycle print cartridges by using the HP return process.
Energy savings	Save energy by initiating sleep mode for the product.
HP Smart Web printing	Use HP Smart Web printing to select, store, and organize text and graphics from multiple Web pages and then edit and print exactly what you see onscreen. It gives you the control you need for printing meaningful information while minimizing waste.
Job storage	Use the job storage features to manage print jobs. By using job storage, you activate printing while you are at the shared product, eliminating lost print jobs that are then reprinted.

Downloaded from www.Manualslib.com manuals search engine

Product features

Feature	Description
Performance	• 540 MHz processor
User interface	• Control-panel help • 4-line graphical display with numeric keypad. (The keypad is not included for the base model) • HP Easy Printer Care software (a Web-based status and problem-solving tool) • Windows® and Macintosh printer drivers • Embedded Web server to access support and order supplies (for network-connected models only)
Printer drivers	• HP PCL 5 Universal Print Driver for Windows (HP UPD PCL 5) • HP PCL 6 • HP postscript emulation Universal Print Driver for Windows (HP UPD PS)
Resolution	• FastRes 1200—produces 1200-dots-per-inch (dpi) print quality for fast, high-quality printing of business text and graphics • ProRes 1200—produces 1200-dpi printing for the best quality in line art and graphic images • 600 dpi—provides the fastest printing
Storage features	• Fonts, forms, and other macros • Job retention
Fonts	• 103 internal scalable fonts available for PCL and 93 for HP UPD postscript emulation • 80 device-matching screen fonts in TrueType format available with the software solution • Additional fonts can be added through USB
Accessories	• HP 500-sheet input tray (up to two additional trays)
Connectivity	• Hi-Speed Host USB 2.0 connection • HP Jetdirect full-featured embedded print server (for the n, dn, and x models only) with IPv4, IPv6, and IP Security. • USB port on the front of the product for walk-up printing • HP Web Jetadmin software • Enhanced input/output (EIO) slot
Supplies	• The supplies status page contains information about toner level, page count, and estimated percent of life remaining. • For information about print cartridges, see www.hp.com/go/learnaboutsupplies. • The product checks for an authentic HP print cartridge at installation. • Internet-enabled supply-ordering capabilities (using HP Easy Printer Care)

Downloaded from www.Manualslib.com manuals search engine

Feature	Description
Supported operating systems	• Microsoft® Windows® 2000, Windows® XP, Windows Server 2003, Windows Server 2008, and Windows Vista® • Macintosh OS X V10.3, V10.4, V10.5, and later • Novell NetWare • UNIX® • Linux
Security	• Secure Disk Erase • Security lock (optional) • Job retention • User PIN authentication for stored jobs • IPsec security • HP encrypted High Performance EIO hard drive (optional) • Hardware integration pocket for installing third-party security devices (not included for the base model)
Accessibility	• The online user guide is compatible with text screen-readers. • The print cartridge can be installed and removed by using one hand. • All doors and covers can be opened by using one hand. • Paper can be loaded in Tray 1 by using one hand.

Downloaded from www.Manualslib.com manuals search engine

Product views

Front view

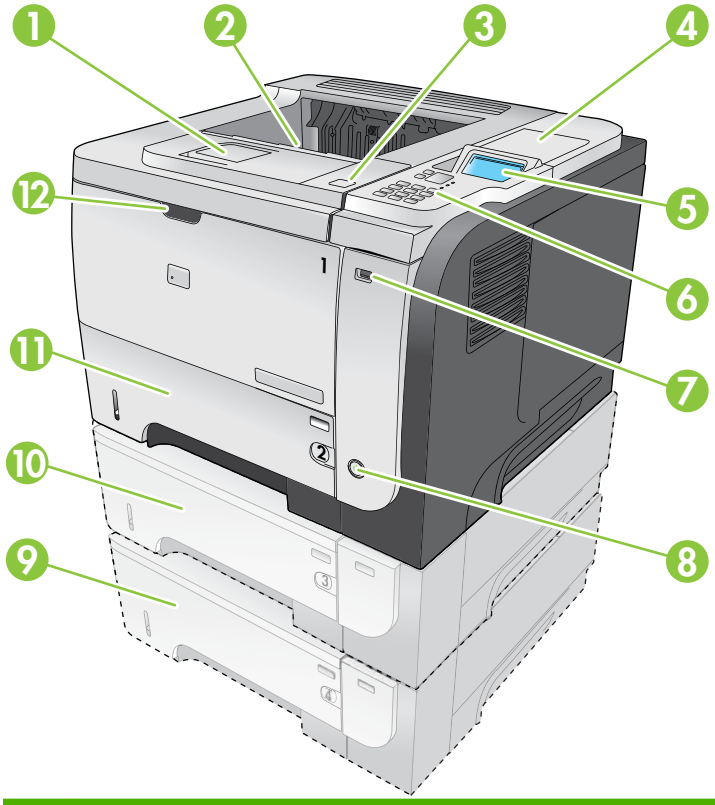

1	Extension for the top output bin
2	Top output bin
3	Top cover (provides access to the print cartridge and the label that lists the model and serial number)
4	Hardware integration pocket for installing third-party security devices (not included for the base model)
5	Control-panel display
6	Control-panel buttons (the 10-key numeric keypad is not available on the base model)
7	USB port for walk-up printing
8	On/off button
9	Optional Tray 4
10	Optional Tray 3 (included with the x model)
11	Tray 2
12	Tray 1 (pull to open)

Downloaded from www.Manualslib.com manuals search engine

Rear view

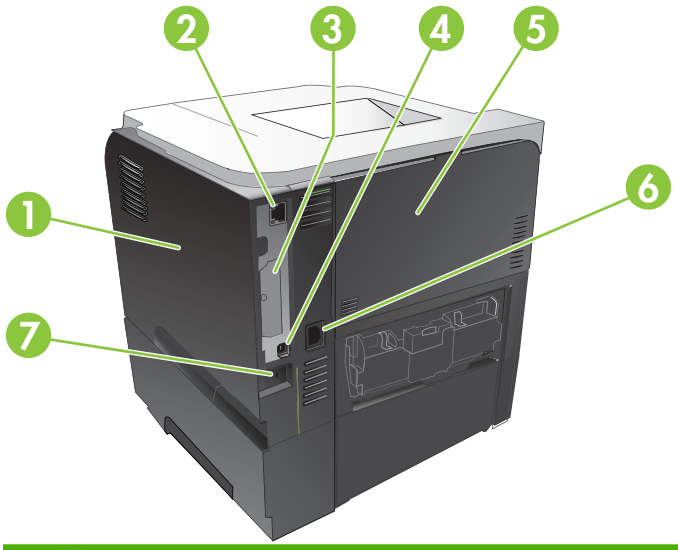

1	Right-side cover (provides access to the DIMM slot and additional USB ports)
2	RJ.45 network connection (for the n, dn, and x models only)
3	EIO slot (covered)
4	Hi-speed USB 2.0 connection, for connecting directly to a computer
5	Rear door (pull open to a 45° angle for straight-through printing and to a 90° angle to clear jams)
6	Power connection
7	Slot for a cable-type security lock

Downloaded from www.Manualslib.com manuals search engine

Downloaded from www.Manualslib.com manuals search engine

2 Control panel

- Control-panel layout
- Use the control-panel menus
- Show Me How menu
- Retrieve job menu
- Information menu
- Paper handling menu
- Manage supplies menu
- Configure device menu
- Diagnostics menu
- Service menu

Downloaded from www.Manualslib.com manuals search engine

Control-panel layout

Use the control panel to obtain product and job status information and to configure the product.

Number	Button or light	Function
1	Control-panel display	Shows status information, menus, help information, and error messages
2	▲ Up arrow	Navigates to the previous item in the list, or increases the value of numeric items
3	Menu button	Opens and closes the menus
4	OK button	• Saves the selected value for an item • Performs the action that is associated with the item that is highlighted on the control-panel display • Clears an error condition when the condition is clearable • Opens the menus when the product is in the **Ready** state
5	Ready light	• **On**: The product is online and ready to accept data to print. • **Off**: The product cannot accept data because it is offline (paused) or has experienced an error. • **Blinking**: The product is going offline. The product stops processing the current job and expels all of the active pages from the paper path.
6	▼ Down arrow	Navigates to the next item in the list, or decreases the value of numeric items
7	Data light	• **On**: The product has data to print, but is waiting to receive all of the data. • **Off**: The product has no data to print. • **Blinking**: The product is processing or printing the data.
8	Attention light	• **On**: The product has experienced a problem. See the control-panel display. • **Off**: The product is functioning without error. • **Blinking**: Action is required. See the control-panel display.

Downloaded from www.Manualslib.com manuals search engine

Number	Button or light	Function
9	Numeric keypad **NOTE:** This item is not included for the HP LaserJet P3011 or HP LaserJet P3015 printers.	Enter numeric values
10	C Clear button **NOTE:** This item is not included for the HP LaserJet P3011 or HP LaserJet P3015 printers.	Returns values to their defaults and exits the help screen
11	Folder button **NOTE:** This item is not included for the HP LaserJet P3011 or HP LaserJet P3015 printers.	Provides quick access to the **RETRIEVE JOB** menu
12	Back arrow	Backs up one level in the menu tree or backs up one numeric entry
13	Stop button	Cancels the current print job and clears the pages from the product
14	? Help button	• Provides information about the message on the control-panel display • Exits the Help screen

Downloaded from www.Manualslib.com manuals search engine

Use the control-panel menus

You can perform most routine printing tasks from the computer through the printer driver or software program. This is the most convenient way to control the product, and it overrides the product control-panel settings. See the help files for the software program, or for more information about opening the printer driver, see Change printer-driver settings for Windows on page 47 or Change printer-driver settings for Macintosh on page 56.

You can also control the product by changing settings in the product's control panel. Use the control panel to access features not supported by the printer driver or software program, and to configure trays for paper size and type.

Use the menus

1. Press the Menu button.
2. Press the down arrow ▼ or the up arrow ▲ to navigate the listings.
3. Press the OK button to select the option.
4. Press the back arrow ⮌ to return to the previous level.
5. Press the Menu button to exit the menu.
6. Press the help button ? to see more information about an item.

The following are the main menus.

Main menus	**SHOW ME HOW**
	RETRIEVE JOB
	INFORMATION
	PAPER HANDLING
	MANAGE SUPPLIES
	CONFIGURE DEVICE
	DIAGNOSTICS
	SERVICE

Downloaded from www.Manualslib.com manuals search engine

Show Me How menu

Use the **SHOW ME HOW** menu to print instructions for using the product.

To display: Press the Menu button, and then select the **SHOW ME HOW** menu.

Item	Explanation
CLEAR JAMS	Provides instructions for clearing jams on the product.
LOAD TRAYS	Provides instructions for loading and configuring trays.
LOAD SPECIAL MEDIA	Provides instructions for loading special print media such as envelopes, transparencies, and labels.
PRINT BOTH SIDES	Provides instructions for printing on both sides of the paper (duplex printing).
SUPPORTED PAPER	Provides a list of the supported paper and print media.
PRINT HELP GUIDE	Prints a page that shows links to additional help on the Web.
PRODUCT VIEWS	Prints a page that explains the product components.

Downloaded from www.Manualslib.com manuals search engine

Retrieve job menu

Use the **RETRIEVE JOB** menu to view listings of all stored jobs.

To display: Press the Menu button, and then select the **RETRIEVE JOB** menu.

Item	Sub-item	Options	Description
<USER NAME>			Each user who has stored jobs is listed by name. Select the appropriate user name to see a list of stored jobs.
	ALL JOBS (WITH PIN)	**PRINT** **PRINT AND DELETE** **DELETE**	This message appears if a user has two or more stored jobs that require a PIN. Either the **PRINT** option or the **PRINT AND DELETE** option displays, depending on the type of jobs listed. Use the **COPIES** option to specify the number of copies of the job to print.
	ALL JOBS (NO PIN)	**PRINT** **PRINT AND DELETE** **DELETE**	This message appears if a user has two or more stored jobs that do not require a PIN. Either the **PRINT** option or the **PRINT AND DELETE** option displays, depending on the type of jobs listed. Use the **COPIES** option to specify the number of copies of the job to print.
	<JOB NAME X>	**PRINT** **PRINT AND DELETE** **DELETE**	Each job is listed by name. Either the **PRINT** option or the **PRINT AND DELETE** option displays, depending on the type of jobs listed. Use the **COPIES** option to specify the number of copies of the job to print.

Downloaded from www.Manualslib.com manuals search engine

Item	Sub-item	Options	Description
		COPIES	Specifies the number of copies of the job to print. The default is 1. For the **ALL JOBS (NO PIN)** and **ALL JOBS (WITH PIN)** menus, two more options are available: ● If you select the **JOB** option, the number of copies specified in the driver are printed. ● If you select the **CUSTOM VALUE** menu, another setting displays where you can specify the number of copies of the job to be printed. The number of copies that were specified in the driver are multiplied by the number of copies specified on the control panel. For example, if you specified two copies in the driver and specify two copies on the control panel, a total of four copies of the job are printed.
USB STORAGE	**<FOLDER NAME>** **<JOB NAME>**	**COPIES**	This menu displays if you have connected a USB storage accessory to the front of the product. Select the folder and the name of the file, and then select the number of copies to print.

Downloaded from www.Manualslib.com manuals search engine

Information menu

Use the **INFORMATION** menu to access and print specific product information.

To display: Press the Menu button, and then select the **INFORMATION** menu.

Item	Description
PRINT MENU MAP	Prints the control-panel menu map, which shows the layout and current settings of the control-panel menu items.
PRINT CONFIGURATION	Prints the product configuration pages, which show the printer settings and installed accessories.
PRINT SUPPLIES STATUS PAGE	Prints the approximate remaining life for the supplies; reports statistics on total number of pages and jobs processed, serial number, page counts, and maintenance information. HP provides approximations of the remaining life for the supplies as a customer convenience. The actual remaining supply levels might be different than the approximations provided.
PRINT USAGE PAGE	Prints a count of all paper sizes that have passed through the product, lists whether they were one-sided or two-sided, and reports the page count.
PRINT DEMO PAGE	Prints a demonstration page.
PRINT FILE DIRECTORY	Prints the name and directory of files stored in the product.
PRINT PCL FONT LIST	Prints the available PCL fonts.
PRINT PS FONT LIST	Prints the available PS fonts.

Downloaded from www.Manualslib.com manuals search engine

Paper handling menu

Use this menu to configure input trays by size and type. It is important to correctly configure the trays with this menu before you print for the first time.

To display: Press the Menu button, and then select the **PAPER HANDLING** menu.

NOTE: If you have used other HP LaserJet products, you might be accustomed to configuring Tray 1 to **First** mode or **Cassette** mode. On HP LaserJet P3010 Series printers, setting Tray 1 to **ANY SIZE** and **ANY TYPE** is equivalent to **First** mode. Setting Tray 1 to a setting other than **ANY SIZE** or **ANY TYPE** is equivalent to **Cassette** mode.

Menu item	Value	Description
TRAY 1 SIZE	Select a paper size from the list.	Configure the paper size for Tray 1. The default is **ANY SIZE**. See Supported paper and print media sizes on page 75 for a complete list of available sizes.
TRAY 1 TYPE	Select a paper type from the list.	Configure the paper type for Tray 1. The default is **ANY TYPE**. See Supported paper and print media types on page 78 for a complete list of available types.
TRAY <X> SIZE X = 2 or optional 3 or 4	Select a paper size from the list.	Configure the paper size for the indicated tray. The default size is **LETTER** or **A4**, depending on your country/region. See Supported paper and print media sizes on page 75 for a complete list of available sizes.
TRAY <X> TYPE X = 2 or optional 3 or 4	Select a paper type from the list.	Configure the paper type for the indicated tray. The default is **PLAIN**. See Supported paper and print media types on page 78 for a complete list of available types.

Downloaded from www.Manualslib.com manuals search engine

Manage supplies menu

Use this menu to configure how the product alerts you when supplies are approaching the estimated end of life.

To display: Press the Menu button, and then select the **MANAGE SUPPLIES** menu.

NOTE: Values that have an asterisk (*) are the factory-default values. Some menu items have no default.

Menu item	Sub-menu item	Values	Description
AT VERY LOW	**BLACK CARTRIDGE**	**STOP** **PROMPT TO CONTINUE** **CONTINUE***	Select what the product should do when the print cartridge is very near the end of its estimated life. **STOP**: The product stops until you replace the cartridge. **PROMPT TO CONTINUE**: The product stops until you clear the prompt message. **CONTINUE**: The product provides an alert message, but it continues printing.
USER DEFINED LOW	**BLACK CARTRIDGE**		Use the arrow buttons or the numeric keypad to enter the percentage of estimated cartridge life at which you want the product to alert you.

Downloaded from www.Manualslib.com manuals search engine

Configure device menu

Use the **CONFIGURE DEVICE** menu for the following tasks:

- Change the default printing settings.
- Adjust the print quality.
- Change the system configuration and I/O options.
- Reset the default settings.

Printing menu

These settings affect only jobs without identified properties. Most jobs identify all of the properties and override the values set from this menu.

To display: Press the Menu button, select the **CONFIGURE DEVICE** menu, and then select the **PRINTING** menu.

NOTE: Values that have an asterisk (*) are the factory-default values. Some menu items have no default.

Menu item	Values	Description
COPIES	Range: 1 - 32000	Set the default number of copies for print jobs. The default number is **1**.
DEFAULT PAPER SIZE	A list of available sizes appears.	Set the default paper size.
DEFAULT CUSTOM PAPER SIZE	• **UNIT OF MEASURE** • **X DIMENSION** • **Y DIMENSION**	Set the default size for any custom print job.
DUPLEX	**OFF*** **ON**	Enable or disable two-sided printing. **NOTE:** This menu is available only on the d, dn, and x models.
DUPLEX BINDING	**LONG EDGE*** **SHORT EDGE**	Change the binding edge for two-sided printing. **NOTE:** This menu is available only on the d, dn, and x models.
OVERRIDE A4/LETTER	**NO** **YES***	Set the product to print an A4 job on letter-size paper when no A4 paper is loaded.
MANUAL FEED	**OFF*** **ON**	Makes the **MANUAL FEED** setting the default for jobs that do not select a tray.
EDGE TO EDGE OVERRIDE	**NO*** **YES**	Change the printable area of Letter and A4-size paper to 2 mm from the left and right edges for single-sided printing. The standard printable area is 4 mm from the left and right edges.

Downloaded from www.Manualslib.com manuals search engine

Menu item	Values	Description
COURIER FONT	**REGULAR***	Select a version of the Courier font.
	DARK	The **DARK** setting is an internal Courier font available on HP LaserJet Series III printers and older.
WIDE A4	**NO** *	Change the printable area of A4 paper.
	YES	**NO**: The printable area is seventy-eight 10-pitch characters on a single line. **YES**: The printable area is eighty 10-pitch characters on a single line.
PRINT PS ERRORS	**OFF***	Print PS error pages.
	ON	
PRINT PDF ERRORS	**OFF***	Print PDF error pages.
	ON	

PCL sub-menu

This menu configures settings for the printer control language.

To display: Press the Menu button, select the **CONFIGURE DEVICE** menu, select the **PRINTING** menu, and then select the **PCL** menu.

NOTE: Values that have an asterisk (*) are the factory-default values. Some menu items have no default.

Item	Values	Description
FORM LENGTH		Sets vertical spacing from 5 to 128 lines for default paper size. The default is 60.
ORIENTATION	**PORTRAIT***	Set the default page orientation.
	LANDSCAPE	
FONT SOURCE	A list of available font sources displays.	Selects the font source. The default is **INTERNAL**.
FONT NUMBER		The product assigns a number to each font and lists the numbers on the PCL font list. The range is 0 to 102. The default is 0.
FONT PITCH		Selects the font pitch. This item might not appear, depending on the font selected. The range is 0.44 to 99.99. The default is 10.00.
SYMBOL SET	A list of available symbol sets displays.	Selects any one of several available symbol sets at the product control panel. A symbol set is a unique grouping of all the characters in a font. **PC-8** or **PC-850** is recommended for line-draw characters. The default is **PC-8**.
APPEND CR TO LF	**NO***	Append a carriage return to each line-feed that is encountered in backward-compatible PCL jobs (pure text, no job control). Some environments indicate a new line by only the line-feed control code.
	YES	

Downloaded from www.Manualslib.com manuals search engine

Item	Values	Description
SUPPRESS BLANK PAGES	**NO*** **YES**	When generating your own PCL, extra form feeds are included that would cause a blank page to be printed. Select **YES** for form feeds to be ignored if the page is blank.
MEDIA SOURCE MAPPING		The PCL5 **MEDIA SOURCE MAPPING** command selects an input tray by a number that maps to the various available trays and feeders.
	STANDARD*	The numbering is based on newer HP LaserJet printers with updated changes to the numbering of trays and feeders.
	CLASSIC	The numbering is based on HP LaserJet 4 printers and earlier models.

Print Quality menu

To display: Press the Menu button, select the **CONFIGURE DEVICE** menu, and then select the **PRINT QUALITY** menu.

NOTE: Values that have an asterisk (*) are the factory-default values. Some menu items have no default.

Item	Sub-item	Sub-item	Values	Description
SET REGISTRATION				For each tray, setting the registration shifts the margin alignment to center the image on the page from top to bottom and from left to right. You can also align the image on the front with the image printed on the back.
	ADJUST TRAY <X>	**PRINT TEST PAGE** **X1 SHIFT** **Y1 SHIFT** **X2 SHIFT** **Y2 SHIFT**	Shift from -20 to 20 along the X or Y axes. 0 is the default.	Print a test page and perform the alignment procedure for each tray. When it creates an image, the product scans across the page from side to side as the sheet feeds from top to bottom into the product. The scan direction is referred to as X. X1 is the scan direction for a single-sided page or for the first side of a two-sided page. X2 is the scan direction for the second side of a two-sided page. The feed direction is referred to as Y. Y1 is the feed direction for a single-sided page or for the first side of a two-sided page. Y2 is the feed direction for the second side of a two-sided page.

Downloaded from www.Manualslib.com manuals search engine

Item	Sub-item	Sub-item	Values	Description
FUSER MODES	A list of paper types displays.		**NORMAL** **HIGH2** **HIGH1** **LOW** **LOW1**	Each paper type has a default fuser mode. Change the fuser mode only if you are experiencing problems printing on certain paper types. After you select a type of paper, you can select a fuser mode that is available for that type.
	RESTORE MODES			Return all fuser-mode settings to the factory-default settings.
OPTIMIZE				Optimize various print modes to solve print-quality issues.
	RESTORE OPTIMIZE			Return all the settings in the **OPTIMIZE** menu to the factory-default values.
RESOLUTION			**300** **600** **FASTRES 1200*** **PRORES 1200**	Sets the resolution at which the product prints. **300**: Produces draft print quality. **600**: Produces high print quality for text. **FASTRES 1200**: Produces 1200-dpi print quality for fast, high-quality printing of business text and graphics. **PRORES 1200**: Produces 1200-dpi print quality for fast, high-quality printing of line art and graphic images.
RET			**OFF** **LIGHT** **MEDIUM*** **DARK**	Use the Resolution Enhancement technology (REt) setting to produce print with smooth angles, curves, and edges. REt does not affect print quality if the resolution is set to the **FASTRES 1200** or **PRORES 1200** settings. All other print resolutions benefit from REt.
ECONOMODE			**OFF*** **ON**	EconoMode is a feature that allows the product to use less toner per page. Selecting this option extends the life of the toner supply and might reduce the cost per page. However, it also reduces print quality. The printed page is adequate for printing drafts. HP does not recommend full-time use of EconoMode. If EconoMode is used full-time, the toner supply might outlast the mechanical parts in the print cartridge. If print quality begins to degrade under these circumstances, you will need to install a new print cartridge, even if there is toner supply remaining in the cartridge.
TONER DENSITY			1 to 5	Lighten or darken the print on the page. The lightest setting is 1, and the darkest setting is 5. The default setting of 3 usually produces the best results.

Downloaded from www.Manualslib.com manuals search engine

Item	Sub-item	Sub-item	Values	Description
AUTO CLEANING			**OFF*** **ON**	When auto-cleaning is on, the product prints a cleaning page when the page count reaches the **CLEANING INTERVAL** setting.
CLEANING INTERVAL			**500*** **1000** **2000** **5000** **10000** **20000**	When **AUTO CLEANING** is on, this option specifies the number of pages that are printed before a cleaning page is automatically printed.
AUTO CLEANING SIZE			**LETTER*** **A4**	When **AUTO CLEANING** is on, this option specifies the paper size that is used to print the cleaning page.
CREATE CLEANING PAGE				Prints a page of instructions for cleaning excess toner off the pressure roller in the fuser. **NOTE:** This option is available only for the HP LaserJet P3011 printer, the HP LaserJet P3015 printer, and the HP LaserJet P3015n printer.
PROCESS CLEANING PAGE				Create and process a cleaning page for cleaning the pressure roller in the fuser. When the cleaning process runs, a cleaning page is printed. This page can be discarded.

Downloaded from www.Manualslib.com manuals search engine

System setup menu

Use the **SYSTEM SETUP** menu to change product-configuration defaults such as sleep mode, product personality (language), and jam recovery.

To display: Press the Menu button, select the **CONFIGURE DEVICE** menu, and then select the **SYSTEM SETUP** menu.

NOTE: Values that have an asterisk (*) are the factory-default values. Some menu items have no default.

Item	Sub-item	Values	Description
DATE/TIME	**DATE**	**- - - - /[MMM]/[DD] YEAR =** **[YYYY]/- - - /[DD] MONTH=** **[YYYY]/[MMM]/- - DAY=**	Set the correct date. The range for the year is 2009 to 2037.
	DATE FORMAT	**YYYY/MMM/DD*** **MMM/DD/YYYY** **DD/MMM/YYYY**	Choose the order in which the year, month, and day appear in the date.
	TIME	**- - :[MM] [PM] HOUR =** **[HH]: - - [PM] MINUTE=** **[HH]:[MM] - - AM/PM=**	Select a configuration for displaying the time.
	TIME FORMAT	**12 HOUR*** **24 HOUR**	Select whether to use the **12 HOUR** or the **24 HOUR** format.
JOB STORAGE LIMIT		Continuous value Range: 1–100 Default = 32	Specify the number of Quick Copy jobs that can be stored on the product.
JOB HELD TIMEOUT		**OFF*** **1 HOUR** **4 HOURS** **1 DAY** **1 WEEK**	Set the amount of time that Quick Copy jobs are kept before being automatically deleted from the queue. This menu item only appears when a hard disk is installed.
SHOW ADDRESS		**AUTO** **OFF***	Specify whether the product's IP address is shown on the display with the **Ready** message.
QUIET MODE		**OFF*** **ON**	Reduce noise during printing. When this setting is turned on, the product prints at a slower speed.
TRAY BEHAVIOR			Control how the product handles paper trays and related prompts at the control panel.

Downloaded from www.Manualslib.com manuals search engine

Item	Sub-item	Values	Description
	USE REQUESTED TRAY	**EXCLUSIVELY*** **FIRST**	Set how to handle jobs that have specified an input tray. • **EXCLUSIVELY**: The product never selects a different tray when the user has indicated that a specific tray should be used, even if that tray is empty. • **FIRST**: The product can pull from another tray if the specified tray is empty, even though the user specifically indicated a tray for the job.
	MANUALLY FEED PROMPT	**ALWAYS*** **UNLESS LOADED**	Specify when a manual feed message should appear when the type or size for a job does not match the size or type configured for Tray 1. • **ALWAYS**: A prompt always appears before printing a manual-feed job. • **UNLESS LOADED**: A message appears only if the multipurpose tray is empty or does not match the size or type of the job.
	PS DEFER MEDIA	**ENABLED*** **DISABLED**	Specify how paper is handled when printing from an Adobe PS print driver. • **ENABLED**: Use HP's paper-handling model. • **DISABLED**: Use the Adobe PS paper-handling model.
	SIZE/TYPE PROMPT	**DISPLAY*** **DO NOT DISPLAY**	Specify whether the tray configuration message appears whenever a tray is closed. • **DISPLAY**: The tray configuration message displays when a tray is closed. You can configure the tray size or type directly from this message. • **DO NOT DISPLAY**: The tray configuration message does not display.

Downloaded from www.Manualslib.com manuals search engine

Item	Sub-item	Values	Description
	USE ANOTHER TRAY	**ENABLED*** **DISABLED**	Turn on or off the control-panel prompt to select another tray when the specified tray is empty. ● **ENABLED**: The product prompts either to add paper to the selected tray or to choose a different tray. ● **DISABLED**: The product prompts the user to add paper to the tray that was initially selected.
	DUPLEX BLANK PAGES	**AUTO*** **YES**	Control how the product handles two-sided jobs (duplexing). ● **AUTO**: Enables Smart Duplexing, which instructs the product not to process both sides if the second side is blank. This can improve print speed. ● **YES**: Disables Smart Duplexing and forces the duplexer to flip the sheet of paper even if it is printed on only one side. **NOTE:** This option is available only for the HP LaserJet P3011n printer or the HP LaserJet P3011dn printer.
	IMAGE ROTATION	**STANDARD*** **ALTERNATE**	Select the **ALTERNATE** setting if you are having trouble aligning images on preprinted forms.
SLEEP DELAY		**1 MINUTE** **15 MINUTES** **30 MINUTES*** **45 MINUTES** **60 MINUTES** **90 MINUTES** **2 HOURS**	Reduces power consumption when the product has been inactive for the selected period.
WAKE TIME	<DAY OF THE WEEK>	**OFF*** **CUSTOM**	Configure the daily wake time for the product.
DISPLAY BRIGHTNESS		Range is 1 through 10.	Set the brightness of the control panel display. The default is **5**.

Downloaded from www.Manualslib.com manuals search engine

Item	Sub-item	Values	Description
PERSONALITY		**AUTO*** **PCL** **PDF** **PS**	Set the default personality.
CLEARABLE WARNINGS		**JOB*** **ON**	Sets whether a warning is cleared on the control panel or when another job is sent.
AUTO CONTINUE		**OFF** **ON***	Determines product behavior when the system generates an Auto Continuable error.
JAM RECOVERY		**AUTO*** **OFF** **ON**	Set whether the product tries to reprint pages after a jam. **AUTO**: The product reprints pages if enough memory is available for full-speed two-sided printing.
RAM DISK		**AUTO*** **OFF**	Sets how the RAM disk feature is configured. This is only available if there is no hard disk installed and the printer has at least 8 MB of memory. **AUTO**: The product determines the optimal RAM disk size based on the amount of available memory. **OFF**: The RAM disk is disabled, but a minimal RAM disk is still active.
LANGUAGE		A listing of available languages appears.	Set the language for the product. The default language is **ENGLISH**.

Downloaded from www.Manualslib.com manuals search engine

I/O menu

Items on the I/O (input/output) menu affect the communication between the product and the computer. If the product contains an HP Jetdirect print server, you can configure basic networking parameters by using this submenu. You can also configure these and other parameters through HP Web Jetadmin or the embedded Web server.

For more information on these options, see Network configuration on page 65.

To display: Press the Menu button, select the **CONFIGURE DEVICE** menu, and then select the **I/O** menu.

NOTE: Values that have an asterisk (*) are the factory-default values. Some menu items have no default.

Item	Sub-item	Values	Description
I/O TIMEOUT		Range: 5 - 300	Set the product **I/O TIMEOUT** in seconds. The default is 15 seconds. Adjust timeout for the best performance. If data from other ports appears in the middle of your print job, increase the timeout value.
EMBEDDED JETDIRECT MENU	See the next table for a list of options.		
EIO <X> JETDIRECT MENU			

Embedded Jetdirect and EIO <X> Jetdirect menus

Item	Sub-item	Sub-item	Values	Description
INFORMATION	**PRINT SEC PAGE**		**YES*** **NO**	**YES**: Prints a page that contains the current security settings on the HP Jetdirect print server. **NO**: A security settings page is not printed.
TCP/IP	**ENABLE**		**ON*** **OFF**	**ON**: Enable the TCP/IP protocol. **OFF**: Disable the TCP/IP protocol.
	HOST NAME			An alphanumeric string, up to 32 characters, used to identify the product. This name is listed on the HP Jetdirect configuration page. The default host name is NPIxxxxxx, where xxxxxx is the last six digits of the LAN hardware (MAC) address.

Downloaded from www.Manualslib.com manuals search engine

Item	Sub-item	Sub-item	Values	Description
	IPV4 SETTINGS	**CONFIG METHOD**	**BOOTP** **DHCP*** **AUTO IP** **MANUAL**	Specify the method that TCP/IPv4 parameters are configured on the HP Jetdirect print server. **BOOTP**: Automatic configuration from a BootP (Bootstrap Protocol) server. **DHCP**: Automatic configuration from a DHCPv4 (Dynamic Host Configuration Protocol) server. If selected and a DHCP lease exists, the **DHCP RELEASE** and **DHCP RENEW** menus are available to set DHCP lease options. **AUTO IP**: Automatic link-local IPv4 addressing. An address in the form 169.254.x.x is assigned automatically. **MANUAL**: Use the **MANUAL SETTINGS** menu to configure TCP/IPv4 parameters.
		MANUAL SETTINGS	**IP ADDRESS** **SUBNET MASK** **DEFAULT GATEWAY**	(Available only if the **CONFIG METHOD** menu is set to the **MANUAL** option) Configure parameters directly from the product control panel: **IP ADDRESS**: The unique IP address (n.n.n.n) of the product, where n is a value from 0 to 255. **SUBNET MASK**: The subnet mask (n.n.n.n) for the product, where n is a value from 0 to 255. **DEFAULT GATEWAY**: The IP address of the gateway or router used for communications with other networks.
		DEFAULT IP	**AUTO IP*** **LEGACY**	Specify the IP address to default to when the print server is unable to obtain an IP address from the network during a forced TCP/IP reconfiguration (for example, when manually configured to use BootP or DHCP). **NOTE:** This feature assigns a static IP address that might interfere with a managed network. **AUTO IP**: A link-local IP address 169.254.x.x is set. **LEGACY**: The address 192.0.0.192 is set, consistent with older HP Jetdirect products.
		DHCP RELEASE	**YES** **NO***	Specify whether to release the current DHCP lease and the leased IP address. **NOTE:** This menu displays if the **CONFIG METHOD** is set to the **DHCP** option and a DHCP lease for the print server exists.

Downloaded from www.Manualslib.com manuals search engine

Item	Sub-item	Sub-item	Values	Description
		DHCP RENEW	**YES** **NO*** **NOTE:** This menu appears if the **CONFIG METHOD** menu is set to the **DHCP** option and a DHCP lease for the print server exists.	Specify whether the print server requests to renew the DHCP lease.
		PRIMARY DNS		Specify the IP address (n.n.n.n) of a Primary DNS Server.
		SECONDARY DNS		Specify the IP address (n.n.n.n) of a Secondary Domain Name System (DNS) Server.
	IPV6 SETTINGS	**ENABLE**	**ON*** **OFF**	Enable or disable IPv6 operation on the print server.
		ADDRESS	**MANUAL SETTINGS** • **ENABLE** • **ADDRESS**	Enable and manually configure a TCP/IPv6 address. **ENABLE**: Choose **ON** to enable manual configuration, or **OFF** to disable manual configuration. The default is **OFF**. **ADDRESS**: Type a 32 hexadecimal digit IPv6 node address that uses the colon hexadecimal syntax.
		DHCPV6 POLICY	**ROUTER SPECIFIED*** **ROUTER UNAVAILABLE** **ALWAYS**	**ROUTER SPECIFIED**: The stateful auto-configuration method to be used by the print server is determined by a router. The router specifies whether the print server obtains its address, its configuration information, or both from a DHCPv6 server. **ROUTER UNAVAILABLE**: If a router is not available, the print server should attempt to obtain its stateful configuration from a DHCPv6 server. **ALWAYS**: Whether or not a router is available, the print server always attempts to obtain its stateful configuration from a DHCPv6 server.
		PRIMARY DNS		Specify an IPv6 address for a primary DNS server that the print server should use.
		SECONDARY DNS		Specify an IPv6 address for a secondary DNS server that the print server should use.

Downloaded from www.Manualslib.com manuals search engine

Item	Sub-item	Sub-item	Values	Description
	PROXY SERVER			Specifies the proxy server to be used by embedded applications in the product. A proxy server is typically used by network clients for Internet access. It caches Web pages, and provides a degree of Internet security, for those clients. To specify a proxy server, enter its IPv4 address or fully-qualified domain name. The name can be up to 255 octets. For some networks, you might need to contact your Internet Service Provider (ISP) for the proxy server address.
	PROXY PORT			Type the port number used by the proxy server for client support. The port number identifies the port reserved for proxy activity on your network, and can be a value from 0 to 65535.
	IDLE TIMEOUT			Configure the time period, in seconds, after which an idle TCP print data connection is closed (default is 270 seconds, 0 disables the timeout).
IPX/SPX	**ENABLE**		**ON*** **OFF**	Enable or disable the IPX/SPX protocol.
	FRAME TYPE		**AUTO*** **EN_8023** **EN_II** **EN_8022** **EN_SNAP**	Select the frame-type setting for your network. **AUTO**: Automatically sets and limits the frame type to the first one detected. **EN_8023**, **EN_II**, **EN_8022**, and **EN_SNAP** are frame-type selections for Ethernet networks
APPLETALK	**ENABLE**		**ON*** **OFF**	Configures an AppleTalk network.
DLC/LLC	**ENABLE**		**ON*** **OFF**	Enable or disable the DLC/LLC protocol.
SECURITY	**SECURE WEB**		**HTTPS REQUIRED*** **HTTPS OPTIONAL**	For configuration management, specify whether the embedded Web server will accept communications using HTTPS (Secure HTTP) only, or both HTTP and HTTPS.
	IPSEC		**KEEP** **DISABLE***	Specify the IPSec status on the print server. **KEEP**: IPSec status remains the same as currently configured. **DISABLE**: IPSec operation on the print server is disabled.
	802.1X		**RESET** **KEEP***	Specify whether to keep the 802.1X settings on the print server or to reset them to the factory defaults.

Downloaded from www.Manualslib.com manuals search engine

Item	Sub-item	Sub-item	Values	Description
	RESET SECURITY		**YES** **NO***	Specify whether the current security settings on the print server will be saved or reset to factory defaults.
DIAGNOSTICS	**EMBEDDED TESTS**			This menu provides tests to help diagnose network hardware or TCP/IP network connection problems. Embedded tests help to identify whether a network fault is internal or external to the product. Use an embedded test to check hardware and communication paths on the print server. After you select and enable a test and set the execution time, you must select the **EXECUTE** option to initiate the test. Depending on the execution time, a selected test runs continuously until either the product is turned off, or an error occurs and a diagnostic page is printed.
		LAN HW TEST	**YES** **NO***	**CAUTION:** Running this embedded test will erase your TCP/IP configuration. Perform an internal loopback test, which sends and receives packets only on the internal network hardware. There are no external transmissions on your network.
		HTTP TEST	**YES** **NO***	Check operation of HTTP by retrieving predefined pages from the product, and test the embedded Web server.
		SNMP TEST	**YES** **NO***	Check operation of SNMP communications by accessing predefined SNMP objects on the product.
		DATA PATH TEST	**YES** **NO***	Identify data path and corruption problems on an HP postscript level 3 emulation product. This test sends a predefined PS file to the product. However, the test is paperless; the file does not print.
		SELECT ALL TESTS	**YES** **NO***	Select all available embedded tests.
		EXECUTION TIME [M]		Specify the length of time (in minutes) that an embedded test will run. You can select a value from 0 to 24 minutes. If you select zero (0), the test runs indefinitely until an error occurs or the product is turned off. Data gathered from the HTTP, SNMP, and Data Path tests is printed after the tests have completed.
		EXECUTE	**YES** **NO***	Select whether to initiate the selected tests.

Downloaded from www.Manualslib.com manuals search engine

Item	Sub-item	Sub-item	Values	Description
	PING TEST			Check network communications. This test sends link-level packets to a remote network host, then waits for an appropriate response. To run a ping test, set the following items:
		DEST TYPE	**IPV4** **IPV6**	Specify whether the target product is an IPv4 or IPv6 node.
		DEST IPV4		Type the IPv4 address.
		DEST IPV6		Type the IPv6 address.
		PACKET SIZE		Specify the size of each packet, in bytes, to be sent to the remote host. The minimum is 64 (default) and the maximum is 2048.
		TIMEOUT		Specify the length of time, in seconds, to wait for a response from the remote host. The default is 1 and the maximum is 100.
		COUNT		Specify the number of ping test packets to send for this test. Select a value from 0 to 100. The default is 4. To configure the test to run continuously, select 0.
		PRINT RESULTS	**YES** **NO***	If the ping test was not set for continuous operation, you can print the test results.
		EXECUTE	**YES** **NO***	Specify whether to initiate the ping test.
	PING RESULTS			View the ping test status and results on the control panel display. You can select the following items:
		PACKETS SENT		Shows the number of packets (0 - 65535) sent to the remote host since the most recent test was initiated or completed. The default is 0.
		PACKETS RECEIVED		Shows the number of packets (0 - 65535) received from the remote host since the most recent test was initiated or completed. The default is 0.
		PERCENT LOST		Shows the percent (0 to 100) of ping test packets that were sent with no response from the remote host since the most recent test was initiated or completed. The default is 0.
		RTT MIN		Shows the minimum detected round-trip-time (RTT), from 0 to 4096 milliseconds, for packet transmission and response. The default is 0.
		RTT MAX		Shows the maximum detected round-trip-time (RTT), from 0 to 4096 milliseconds, for packet transmission and response. The default is 0.

Downloaded from www.Manualslib.com manuals search engine

Item	Sub-item	Sub-item	Values	Description
		RTT AVERAGE		Shows the average round-trip-time (RTT), from 0 to 4096 milliseconds, for packet transmission and response. The default is 0.
		PING IN PROGRESS	**YES** **NO***	Select whether the control panel indicates when a ping test is in progress.
		REFRESH	**YES** **NO***	When viewing the ping test results, this item updates the ping test data with current results. A refresh automatically occurs when the menu times out or you manually return to the main menu.
LINK SPEED			**AUTO*** **10T HALF** **10T FULL** **100TX HALF** **100TX FULL** **100TX AUTO** **1000TX FULL**	The link speed and communication mode of the print server must match the network. The available settings depend on the product and installed print server. **CAUTION:** If you change the link setting, network communications with the print server and network product might be lost. **AUTO**: The print server uses auto-negotiation to configure itself with the highest link speed and communication mode allowed. If auto-negotiation fails, either **100TX HALF** or **10T HALF** is set depending on the detected link speed of the hub/switch port. (A 1000T half-duplex selection is not supported.) **10T HALF**: 10 Mbps, half-duplex operation. **10T FULL**: 10 Mbps, full-duplex operation. **100TX HALF**: 100 Mbps, half-duplex operation. **100TX FULL**: 100 Mbps, full-duplex operation. **100TX AUTO**: Limits auto-negotiation to a maximum link speed of 100 Mbps. **1000TX FULL**: 1000 Mbps, full-duplex operation.

Resets menu

Use the **RESETS** menu to reset factory settings, disable and enable sleep mode, and update the product after new supplies are installed.

To display: Press the Menu button, select the **CONFIGURE DEVICE** menu, and then select the **RESETS** menu.

NOTE: Values that have an asterisk (*) are the factory-default values. Some menu items have no default.

Downloaded from www.Manualslib.com manuals search engine

Item	Sub-item	Values	Description
RESTORE FACTORY SETTINGS			Clear the page buffer, remove all perishable personality data, reset the printing environment, and return all default settings to factory defaults.
SLEEP MODE		**OFF** **ON***	Select whether the product can enter sleep mode. If you turn this setting off, you cannot change any settings in the **SLEEP DELAY** menu.

Downloaded from www.Manualslib.com manuals search engine

Diagnostics menu

Use the **DIAGNOSTICS** menu to run tests that can help you identify and solve problems with the product.

To display: Press the Menu button, and then select the **DIAGNOSTICS** menu.

NOTE: Values that have an asterisk (*) are the factory-default values. Some menu items have no default.

Item	Sub-item	Values	Description
PRINT EVENT LOG			Prints a report containing the last 50 entries in the product's event log, starting with the most recent.
SHOW EVENT LOG			Displays the last 50 events, starting with the most recent.
PAPER PATH SENSORS			Performs a test on each of the product's sensors to determine if they are working correctly and displays the status of each sensor.
PAPER PATH TEST			Tests the paper-handling features of the product, such as the configuration of the trays.
	PRINT TEST PAGE		Generates a page for testing the paper-handling features. You must define the path for the test in order to test specific paper paths.
	SOURCE	**ALL TRAYS** **TRAY 1** **TRAY 2*** **TRAY 3** **TRAY 4**	Specifies whether the test page is printed from all trays or from a specific tray.
	DUPLEX	**OFF** **ON**	Determines whether the duplexer is included in the test. **NOTE:** This option is available only for the HP LaserJet P3011n printer and the HP LaserJet P3011dn printer.
	COPIES	**1*** **10** **50** **100** **500**	Determines how many pages should be sent from the specified source as part of the test.
MANUAL SENSOR TEST			Performs tests to determine whether the paper path sensors are operating correctly.

Downloaded from www.Manualslib.com manuals search engine

Item	Sub-item	Values	Description
MANUAL SENSOR TEST 2			Performs additional tests to determine whether the paper path sensors are operating correctly.
COMPONENT TEST	A list of available components appears.		Activate individual parts independently to isolate noise, leaking, and other hardware issues.
PRINT/STOP TEST		Range is 0 - 60,000 milliseconds. The default is 0.	Isolates print quality faults more accurately by stopping the product in mid-print cycle, which allows you to see where the image begins to degrade. This causes a jam message that might need to be manually cleared. A service representative should perform this test.
PRINT FUSER TEST PAGE			Print this page to determine the current status of the fuser.
SIGNATURE CHECK		**CANCEL IF BAD*** **PROMPT IF BAD**	Configure how the product responds during a firmware upgrade if the firmware-upgrade code does not match the product signature.

Service menu

The **SERVICE** menu is locked and requires a PIN for access. This menu is intended for use by authorized service personnel.

Downloaded from www.Manualslib.com manuals search engine

Downloaded from www.Manualslib.com manuals search engine

3 Software for Windows

- Supported operating systems for Windows
- Supported printer drivers for Windows
- HP Universal Print Driver (UPD)
- Select the correct printer driver for Windows
- Priority for print settings
- Change printer-driver settings for Windows
- Remove software for Windows
- Supported utilities for Windows
- Software for other operating systems

Downloaded from www.Manualslib.com manuals search engine

Supported operating systems for Windows

- Windows Vista (32-bit and 64-bit)
- Windows XP (32-bit and 64-bit)
- Windows Server 2008 (32-bit and 64-bit)
- Windows Server 2003 (32-bit and 64-bit)
- Windows 2000 (32-bit)

Downloaded from www.Manualslib.com manuals search engine

Supported printer drivers for Windows

- HP PCL 6 (default printer driver)
- HP postscript emulation Universal Print Driver (HP UPD PS)
- HP PCL 5 UPD Universal Print Driver (HP UPD PCL 5) - available for download from www.hp.com/go/ljp3010series_software

The printer drivers include online Help.

NOTE: For more information about the UPD, see www.hp.com/go/upd.

Downloaded from www.Manualslib.com manuals search engine

HP Universal Print Driver (UPD)

The HP Universal Print Driver (UPD) for Windows is a single driver that gives you instant access to virtually any HP LaserJet product, from any location, without downloading separate drivers. It is built on proven HP print driver technology and has been tested thoroughly and used with many software programs. It is a powerful solution that performs consistently over time.

The HP UPD communicates directly with each HP product, gathers configuration information, and then customizes the user interface to show the product's unique, available features. It automatically enables features that are available for the product, such as two-sided printing and stapling, so you do not need to enable them manually.

For more information, go to www.hp.com/go/upd.

UPD installation modes

Traditional mode	• Use this mode if you are installing the driver from a CD for a single computer. • When installed from the CD that comes with the product, UPD operates like traditional printer drivers. It operates with a specific product. • If you use this mode, you must install UPD separately for each computer and for each product.
Dynamic mode	• To use this mode, download UPD from the Internet. See www.hp.com/go/upd. • Dynamic mode allows you to use a single driver installation, so you can discover and print to HP products in any location. • Use this mode if you are installing UPD for a workgroup.

Downloaded from www.Manualslib.com manuals search engine

Select the correct printer driver for Windows

Printer drivers provide access to the product features and allow the computer to communicate with the product (using a printer language). Check the installation notes and readme files on the product CD for additional software and languages.

HP PCL 6 driver description

- Provided on the product CD and at www.hp.com/go/ljp3010series_software
- Provided as the default driver
- Recommended for printing in all Windows environments
- Provides the overall best speed, print quality, and product-feature support for most users
- Developed to align with the Windows Graphic Device Interface (GDI) for the best speed in Windows environments
- Might not be fully compatible with third-party and custom software programs that are based on PCL 5

HP UPD PS driver description

- Provided on the product CD and at www.hp.com/go/ljp3010series_software
- Recommended for printing with Adobe® software programs or with other highly graphics-intensive software programs
- Provides support for printing from postscript emulation needs, or for postscript flash font support

HP UPD PCL 5 driver description

- Installs from the **Add Printer** wizard
- Recommended for general office printing in Windows environments
- Compatible with previous PCL versions and older HP LaserJet products
- The best choice for printing from third-party or custom software programs
- The best choice when operating with mixed environments, which require the product to be set to PCL 5 (UNIX, Linux, mainframe)
- Designed for use in corporate Windows environments to provide a single driver for use with multiple printer models
- Preferred when printing to multiple printer models from a mobile Windows computer

Downloaded from www.Manualslib.com manuals search engine

Priority for print settings

Changes to print settings are prioritized depending on where the changes are made:

NOTE: The names of commands and dialog boxes might vary depending on your software program.

- **Page Setup dialog box**: Click **Page Setup** or a similar command on the **File** menu of the program you are working in to open this dialog box. Settings changed here override settings changed anywhere else.
- **Print dialog box**: Click **Print**, **Print Setup**, or a similar command on the **File** menu of the program you are working in to open this dialog box. Settings changed in the **Print** dialog box have a lower priority and usually do not override changes made in the **Page Setup** dialog box.
- **Printer Properties dialog box (printer driver)**: Click **Properties** in the **Print** dialog box to open the printer driver. Settings changed in the **Printer Properties** dialog box usually do not override settings anywhere else in the printing software. You can change most of the print settings here.
- **Default printer driver settings**: The default printer driver settings determine the settings used in all print jobs, *unless* settings are changed in the **Page Setup**, **Print**, or **Printer Properties** dialog boxes.
- **Printer control panel settings**: Settings changed at the printer control panel have a lower priority than changes made anywhere else.

Downloaded from www.Manualslib.com manuals search engine

Change printer-driver settings for Windows

Change the settings for all print jobs until the software program is closed	Change the default settings for all print jobs	Change the product configuration settings
1. On the **File** menu in the software program, click **Print**. 2. Select the driver, and then click **Properties** or **Preferences**. The steps can vary; this procedure is most common.	1. **Windows XP, Windows Server 2003, and Windows Server 2008 (using the default Start menu view)**: Click **Start**, and then click **Printers and Faxes**. **-or-** **Windows 2000, Windows XP, Windows Server 2003, and Windows Server 2008 (using the Classic Start menu view)**: Click **Start**, click **Settings**, and then click **Printers**. **-or-** **Windows Vista**: Click **Start**, click **Control Panel**, and then in the category for **Hardware and Sound** click **Printer**. 2. Right-click the driver icon, and then select **Printing Preferences**.	1. **Windows XP, Windows Server 2003, and Windows Server 2008 (using the default Start menu view)**: Click **Start**, and then click **Printers and Faxes**. **-or-** **Windows 2000, Windows XP, Windows Server 2003, and Windows Server 2008 (using the Classic Start menu view)**: Click **Start**, click **Settings**, and then click **Printers**. **-or-** **Windows Vista**: Click **Start**, click **Control Panel**, and then in the category for **Hardware and Sound** click **Printer**. 2. Right-click the driver icon, and then select **Properties**. 3. Click the **Device Settings** tab.

Downloaded from www.Manualslib.com manuals search engine

Remove software for Windows

Windows XP

1. Click **Start**, **Control Panel**, and then **Add or Remove Programs**.
2. Find and select the product from the list.
3. Click the **Change/Remove** button to remove the software.

Windows Vista

1. Click **Start**, **Control Panel**, and then **Programs and Features**.
2. Find and select the product from the list.
3. Select the **Uninstall/Change** option.

Downloaded from www.Manualslib.com manuals search engine

Supported utilities for Windows

HP Web Jetadmin

HP Web Jetadmin is a simple print and imaging peripheral management software tool that helps optimize product use, control color costs, secure products, and streamline supplies management by enabling remote configuration, proactive monitoring, security troubleshooting, and reporting of printing and imaging products.

To download a current version of HP Web Jetadmin and for the latest list of supported host systems, visit www.hp.com/go/webjetadmin.

When installed on a host server, a Windows client can gain access to HP Web Jetadmin by using a supported Web browser (such as Microsoft® Internet Explorer) by navigating to the HP Web Jetadmin host.

Embedded Web server

The product is equipped with an embedded Web server, which provides access to information about product and network activities. This information appears in a Web browser, such as Microsoft Internet Explorer, Netscape Navigator, Apple Safari, or Firefox.

The embedded Web server resides on the product. It is not loaded on a network server.

The embedded Web server provides an interface to the product that anyone who has a network-connected computer and a standard Web browser can use. No special software is installed or configured, but you must have a supported Web browser on your computer. To gain access to the embedded Web server, type the IP address for the product in the address line of the browser. (To find the IP address, print a configuration page. For more information about printing a configuration page, see Print the information and show-me-how pages on page 108.)

For a complete explanation of the features and functionality of the embedded Web server, see Use the embedded Web server on page 113.

Downloaded from www.Manualslib.com manuals search engine

HP Easy Printer Care

HP Easy Printer Care software is a program that you can use for the following tasks:

- Check the product status
- Check the supplies status and use HP SureSupply to shop online for supplies
- Set up alerts
- View product usage reports
- View product documentation
- Gain access to troubleshooting and maintenance tools
- Use HP Proactive Support to routinely scan your printing system and to prevent potential problems. HP Proactive Support can update software, firmware, and HP printer drivers.

You can view HP Easy Printer Care software when the product is directly connected to your computer or when it is connected to a network.

Supported operating systems	• Microsoft® Windows 2000, Service Pack 4 • Microsoft Windows XP, Service Pack 2 (32-bit and 64-bit) • Microsoft Windows Server 2003, Service Pack 1 (32-bit and 64-bit) • Microsoft Windows Server 2008 (32-bit and 64-bit) • Microsoft Windows Vista™ (32-bit and 64-bit)
Supported browsers	• Microsoft Internet Explorer 6.0 or 7.0

To download HP Easy Printer Care software , go to www.hp.com/go/easyprintercare. This Web site also provides updated information about supported browsers and a list of HP products that support HP Easy Printer Care software.

For more information about using HP Easy Printer Care software, see Open the HP Easy Printer Care software on page 110.

Downloaded from www.Manualslib.com manuals search engine

Software for other operating systems

OS	Software
UNIX	For HP-UX and Solaris networks, go to www.hp.com/support/go/jetdirectunix_software to install model scripts using the HP Jetdirect printer installer (HPPI) for UNIX. For the latest model scripts, go to www.hp.com/go/unixmodelscripts.
Linux	For information, go to www.hp.com/go/linuxprinting.

Downloaded from www.Manualslib.com manuals search engine

Downloaded from www.Manualslib.com manuals search engine

4 Use the product with Macintosh

- Software for Macintosh
- Use features in the Macintosh printer driver

Downloaded from www.Manualslib.com manuals search engine

Software for Macintosh

Supported operating systems for Macintosh

The product supports the following Macintosh operating systems:

- Mac OS X V10.3.9, V10.4, V10.5, and later

NOTE: For Mac OS X V10.4 and later, PPC and Intel® Core™ Processor Macs are supported.

Supported printer drivers for Macintosh

The HP LaserJet software installer provides PostScript® Printer Description (PPD) files, Printer Dialog Extensions (PDEs), and the HP Printer Utility for use with Mac OS X and Macintosh computers. The HP printer PPD and PDE files, in combination with the built-in Apple PostScript printer drivers, provide full printing functionality and access to specific HP printer features.

Remove software from Macintosh operating systems

You must have administrator rights to remove the software.

Mac OS X V10.3 and V10.4

1. Browse to the following folder:

   `Library/Printers/PPDs/Contents/Resources`

2. Open the `<lang>.lproj` folder where <lang> is a two-letter language code.
3. Delete the .GZ file for this product.
4. Repeat steps 2 and 3 for each language folder.

Mac OS X V10.5

1. Browse to the following folder:

   `Library/Printers/PPDs/Contents/Resources`

2. Delete the .GZ file for this product.

Priority for print settings for Macintosh

Changes to print settings are prioritized depending on where the changes are made:

NOTE: The names of commands and dialog boxes might vary depending on your software program.

- **Page Setup dialog box**: Click **Page Setup** or a similar command on the **File** menu of the program you are working in to open this dialog box. Settings changed here might override settings changed anywhere else.
- **Print dialog box**: Click **Print**, **Print Setup**, or a similar command on the **File** menu of the program you are working in to open this dialog box. Settings changed in the **Print** dialog box have a lower priority and do *not* override changes made in the **Page Setup** dialog box.

Downloaded from www.Manualslib.com manuals search engine

- **Default printer driver settings**: The default printer driver settings determine the settings used in all print jobs, *unless* settings are changed in the **Page Setup**, **Print**, or **Printer Properties** dialog boxes.
- **Printer control panel settings**: Settings changed at the printer control panel have a lower priority than changes made anywhere else.

Downloaded from www.Manualslib.com manuals search engine

Change printer-driver settings for Macintosh

Change the settings for all print jobs until the software program is closed	Change the default settings for all print jobs	Change the product configuration settings
1. On the **File** menu, click **Print**. 2. Change the settings that you want on the various menus.	1. On the **File** menu, click **Print**. 2. Change the settings that you want on the various menus. 3. On the **Presets** menu, click **Save as** and type a name for the preset. These settings are saved in the **Presets** menu. To use the new settings, you must select the saved preset option every time you open a program and print.	**Mac OS X V10.3 or Mac OS X V10.4** 1. From the Apple menu, click **System Preferences** and then **Print & Fax**. 2. Click **Printer Setup**. 3. Click the **Installable Options** menu. **Mac OS X V10.5** 1. From the Apple menu, click **System Preferences** and then **Print & Fax**. 2. Click **Options & Supplies**. 3. Click the **Driver** menu. 4. Select the driver from the list, and configure the installed options.

Downloaded from www.Manualslib.com manuals search engine

Software for Macintosh computers

HP Printer Utility

Use the HP Printer Utility to configure, administer, and set up product features that are not available from the printer driver.

You can use the HP Printer Utility with HP products that are connected to the network with a universal serial bus (USB) cable, an Ethernet cable, or a wireless connection.

Open the HP Printer Utility

Mac OS X V10.3 or Mac OS X V10.4	1. Open the Finder, click **Applications**, click **Utilities**, and then double-click **Printer Setup Utility**. 2. Select the product that you want to configure, and then click **Utility**.
Mac OS X V10.5	1. From the **Printer** menu, click **Printer Utility**. **-or-** From the **Print Queue**, click the **Utility** icon.

Downloaded from www.Manualslib.com manuals search engine

HP Printer Utility features

The HP Printer Utility consists of pages that you open by clicking in the **Configuration Settings** list. The following table describes the tasks that you can perform from these pages.

Item	Description
Configuration Page	Prints a configuration page.
Supplies Status	Shows the device supplies status and provides links for online supplies-ordering.
HP Support	Provides access to technical assistance, online supplies ordering, online registration, and recycling and return information.
File Upload	Transfers files from the computer to the device.
Upload Fonts	Transfers font files from the computer to the device.
Firmware Update	Transfers updated firmware files from the computer to the device.
Duplex Mode	Turns on the automatic two-sided printing mode.
Economode & Toner Density	Turns on the Economode setting to conserve toner, or adjusts toner density.
Resolution	Changes the resolution settings, including the REt setting.
Lock Resources	Locks or unlocks storage products, such as a hard disk.
Stored Jobs	Manages print jobs that are stored on the device hard disk.
Trays Configuration	Changes the default tray settings.
IP Settings	Changes the device network settings and provides access to the embedded Web server.
Bonjour Settings	Provides the ability to turn on or off Bonjour support or change the device service name that is listed on a network.
Additional Settings	Provides access to the embedded Web server.
E-mail Alerts	Configures the device to send e-mail notices for certain events.

Supported utilities for Macintosh

Embedded Web server

The product is equipped with an embedded Web server, which provides access to information about product and network activities. For more information, see Embedded Web server sections on page 114.

Downloaded from www.Manualslib.com manuals search engine

Use features in the Macintosh printer driver

Create and use printing presets in Macintosh

Use printing presets to save the current printer driver settings for reuse.

Create a printing preset

1. On the **File** menu, click **Print**.
2. Select the driver.
3. Select the print settings.
4. In the **Presets** box, click **Save As...**, and type a name for the preset.
5. Click **OK**.

Use printing presets

1. On the **File** menu, click **Print**.
2. Select the driver.
3. In the **Presets** box, select the printing preset that you want to use.

NOTE: To use printer-driver default settings, select **Standard**.

Resize documents or print on a custom paper size

You can scale a document to fit on a different size of paper.

1. On the **File** menu, click **Print**.
2. Open the **Paper Handling** menu.
3. In the area for **Destination Paper Size**, select **Scale to fit paper size**, and then select the size from the drop-down list.
4. If you want to use only paper that is smaller than the document, select **Scale down only**.

Print a cover page

You can print a separate cover page for your document that includes a message (such as “Confidential”).

1. On the **File** menu, click **Print**.
2. Select the driver.
3. Open the **Cover Page** menu, and then select whether to print the cover page **Before Document** or **After Document**.
4. In the **Cover Page Type** menu, select the message that you want to print on the cover page.

   NOTE: To print a blank cover page, select **Standard** as the **Cover Page Type**.

Downloaded from www.Manualslib.com manuals search engine

Use watermarks

A watermark is a notice, such as “Confidential,” that is printed in the background of each page of a document.

1. On the **File** menu, click **Print**.
2. Open the **Watermarks** menu.
3. Next to **Mode**, select the type of watermark to use. Select **Watermark** to print a semi-transparent message. Select **Overlay** to print a message that is not transparent.
4. Next to **Pages**, select whether to print the watermark on all pages or on the first page only.
5. Next to **Text**, select one of the standard messages, or select **Custom** and type a new message in the box.
6. Select options for the remaining settings.

Print multiple pages on one sheet of paper in Macintosh

You can print more than one page on a single sheet of paper. This feature provides a cost-effective way to print draft pages.

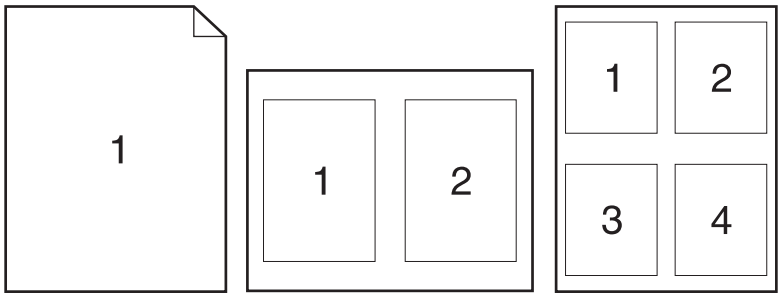

1. On the **File** menu, click **Print**.
2. Select the driver.
3. Open the **Layout** menu.
4. Next to **Pages per Sheet**, select the number of pages that you want to print on each sheet (1, 2, 4, 6, 9, or 16).
5. Next to **Layout Direction**, select the order and placement of the pages on the sheet.
6. Next to **Borders**, select the type of border to print around each page on the sheet.

Downloaded from www.Manualslib.com manuals search engine

Print on both sides of the page (duplex printing)

Use automatic duplex printing

1. Insert enough paper into one of the trays to accommodate the print job. If you are loading special paper such as letterhead, load it in one of the following ways:
   - For Tray 1, load the letterhead paper face-up with the top edge feeding into the product first.
   - For all other trays, load the letterhead paper face-down with the top edge at the front of the tray.
2. On the **File** menu, click **Print**.
3. Open the **Layout** menu.
4. Next to **Two-Sided**, select either **Long-Edge Binding** or **Short-Edge Binding**.
5. Click **Print**.

Print on both sides manually

1. Insert enough paper into one of the trays to accommodate the print job. If you are loading special paper such as letterhead, load it in one of the following ways:
   - For Tray 1, load the letterhead paper face-up with the top edge feeding into the product first.
   - For all other trays, load the letterhead paper face-down with the top edge at the front of the tray.
2. On the **File** menu, click **Print**.
3. On the **Finishing** menu, select **Manually Print on 2nd Side**.
4. Click **Print**. Follow the instructions in the pop-up window that appears on the computer screen before placing the output stack in Tray 1 for printing the second half.
5. Go to the product, and remove any blank paper that is in Tray 1.
6. Insert the printed stack face-up into Tray 1 with the top edge feeding into the product first. You *must* print the second side from Tray 1.
7. If prompted, press the appropriate control-panel button to continue.

Store jobs

You can store jobs on the product so you can print them at any time. You can share stored jobs with other users, or you can make them private.

NOTE: For more information about job storage features, see Use job-storage features on page 96.

1. On the **File** menu, click the **Print** option.
2. Open the **Job Storage** menu.
3. In the **Job Storage Mode** drop-down list, select the type of stored job.
4. To use a custom user name or job name, click the **Custom** button, and then enter the user name or the job name.

Downloaded from www.Manualslib.com manuals search engine

Select which option to use if another stored job already has that name.

Use Job Name + (1 - 99)	Append a unique number to the end of the job name.
Replace Existing File	Overwrite the existing stored job with the new one.

5. If you selected the **Stored Job** or **Personal Job** option in step 3, you can protect the job with a PIN. Type a 4-digit number in the **Use PIN to Print** field. When other people attempt to print this job, the product prompts them to enter this PIN number.

Use the Services menu

If the product is connected to a network, use the **Services** menu to obtain product and supply-status information.

1. On the **File** menu, click **Print**.
2. Open the **Services** menu.
3. To open the embedded Web server and perform a maintenance task, do the following:
   a. Select **Device Maintenance**.
   b. Select a task from the drop-down list.
   c. Click **Launch**.
4. To go to various support Web sites for this product, do the following:
   a. Select **Services on the Web**.
   b. Select **Internet Services**, and select an option from the drop-down list.
   c. Click **Go!**.

Downloaded from www.Manualslib.com manuals search engine

5 Connectivity

- USB connection
- Network configuration

Downloaded from www.Manualslib.com manuals search engine

USB connection

This product supports a USB 2.0 connection. You must use an A-to-B type USB cable that is no longer than 2 meters (6.56 feet).

Downloaded from www.Manualslib.com manuals search engine

Network configuration

You might need to configure certain network parameters on the product. You can configure these parameters from the control panel, the embedded Web server, or for most networks, from the HP Web Jetadmin software.

For a complete list of supported networks and for instructions on configuring network parameters from software, see the *HP Jetdirect Embedded Print Server Administrator's Guide*. The guide comes with products in which an HP Jetdirect embedded print server is installed.

Supported network protocols

The product supports the TCP/IP network protocol.

Table 5-1 Printing

Service name	Description
port9100 (Direct Mode)	Printing service
Line printer daemon (LPD)	Printing service
Advanced LPD (custom LPD queues)	Protocol and programs associated with line-printer spooling services installed on TCP/IP systems.
FTP	TCP/IP utility for transferring data between systems.
WS Print	Uses the Microsoft Web Services for Devices (WSD) Print services on the HP Jetdirect print server.
WS Discovery	Allows Microsoft WS discovery protocols on the HP Jetdirect print server.

Table 5-2 Network device discovery

Service name	Description
SLP (Service Location Protocol)	Device-discovery protocol, used to help find and configure network devices. Used primarily by Microsoft-based programs.
Bonjour	Device-discovery protocol, used to help find and configure network devices. Used primarily by Apple Macintosh-based programs.

Table 5-3 Messaging and management

Service name	Description
HTTP (Hyper Text Transfer Protocol)	Allows Web browsers to communicate with embedded Web server.
EWS (embedded Web server)	Allows you to manage the product through a Web browser.
SNMP (Simple Network Management Protocol)	Used by network applications for product management. SNMP v1, SNMP v3, and standard MIB-II (Management Information Base) objects are supported.

Downloaded from www.Manualslib.com manuals search engine

Table 5-3 Messaging and management (continued)

Service name	Description
LLMNR (Link Local Multicast Name Resolution)	Specifies if the product responds to LLMNR requests over IPv4 and IPv6.
TFTP Configuration	Allows you to use TFTP to download a configuration file containing additional configuration parameters, such as SNMP or non-default settings, for an HP Jetdirect print server.

Table 5-4 IP addressing

Service name	Description
DHCP (Dynamic Host Configuration Protocol)	For automatic IP address assignment. The product supports IPv4 and IPv6. The DHCP server provides the product with an IP address. Generally, no user intervention is required for the product to obtain an IP address from a DHCP server.
BOOTP (Bootstrap Protocol)	For automatic IP address assignment. The BOOTP server provides the product with an IP address. Requires the administrator to input a product's MAC hardware address on the BOOTP server for the product to obtain an IP address from that server.
Auto IP	For automatic IP address assignment. If neither a DHCP server nor a BOOTP server is present, the product uses this service to generate a unique IP address.

Table 5-5 Security features

Service name	Description
IPsec/Firewall	Provides network-layer security on IPv4 and IPv6 networks. A firewall provides simple control of IP traffic. IPsec provides additional protection through authentication and encryption protocols.
Kerberos	Allows you to exchange private information across an open network by assigning a unique key, called a ticket, to each user who logs on to the network. The ticket is then embedded in messages to identify the sender.
SNMP v3	Employs a user-based security model for SNMP v3, which provides user authentication and data privacy through encryption.
Access control list (ACL)	Specifies the individual host systems, or networks of host systems, that are allowed to access the HP Jetdirect print server and the attached network product.
SSL/TLS	Allows you to transmit private documents via the Internet and guarantee privacy and data integrity between the client and server applications.
IPsec batch configuration	Provides network-layer security through the simple control of IP traffic to and from the product. This protocol provides the benefits of encryption and authentication and allows for multiple configurations.

Downloaded from www.Manualslib.com manuals search engine

Configure the network product

View or change network settings

Use the embedded Web server to view or change IP configuration settings.

1. Print a configuration page, and locate the IP address.
   - If you are using IPv4, the IP address contains only digits. It has this format:

     `xxx.xxx.xxx.xxx`

   - If you are using IPv6, the IP address is a hexadecimal combination of characters and digits. It has a format similar to this:

     `xxxx::xxxx:xxxx:xxxx:xxxx`

2. To open the embedded Web server, type the IP address into the address line of a Web browser.
3. Click the **Networking** tab to obtain network information. You can change settings as needed.

Set or change the network password

Use the embedded Web server to set a network password or change an existing password.

1. Open the embedded Web server, click the **Networking** tab, and click the **Security** link.

   NOTE: If a password has previously been set, you are prompted to type the password. Type the password, and then click the **Apply** button.

2. Type the new password in the **New Password** box and in the **Verify password** box.
3. At the bottom of the window, click the **Apply** button to save the password.

Downloaded from www.Manualslib.com manuals search engine

Manually configure IPv4 TCP/IP parameters from the control panel

Use the control-panel menus to manually set an IPv4 address, subnet mask, and default gateway.

1. Press the Menu button.
2. Open each of the following menus. Press the down arrow ▼ to highlight it and then press the OK button to select it.
   a. **CONFIGURE DEVICE**
   b. **I/O**
   c. **EMBEDDED JETDIRECT MENU**
   d. **TCP/IP**
   e. **IPV4 SETTINGS**
   f. **CONFIG METHOD**
   g. **MANUAL**
   h. **MANUAL SETTINGS**
   i. **IP ADDRESS**, **SUBNET MASK**, or **DEFAULT GATEWAY**
3. Use the numeric keypad, or press the up arrow ▲ or the down arrow ▼ to increase or decrease the number for the first byte of the IP address, subnet mask, or default gateway.
4. Press the OK button to move to the next set of numbers, or press the back arrow ⮌ to move to the previous set of numbers.
5. Repeat steps 3 and 4 until the IP address, subnet mask, or default gateway is complete, and then press the OK button to save the setting.
6. Press the Menu button to return to the **Ready** state.

Downloaded from www.Manualslib.com manuals search engine

Manually configure IPv6 TCP/IP parameters from the control panel

Use the control-panel menus to manually set an IPv6 address.

1. Press the Menu button .
2. Open each of the following menus. Press the down arrow ▼ to highlight it and then press the OK button to select it.
   a. **CONFIGURE DEVICE**
   b. **I/O**
   c. **EMBEDDED JETDIRECT MENU**
   d. **TCP/IP**
   e. **IPV6 SETTINGS**
   f. **ADDRESS**
   g. **MANUAL SETTINGS**
   h. **ENABLE**
   i. **ON**
   j. **ADDRESS**
3. Use the numeric keypad, or press the up arrow ▲ or the down arrow ▼ to enter the address. Press the OK button.

   NOTE: If you are using the arrow buttons to enter the address, you must press the OK button after entering each character.
4. Press the up arrow ▲ or the down arrow ▼ to select the stop character ⊗. Press the OK button.
5. Press the Menu button to return to the **Ready** state.

Downloaded from www.Manualslib.com manuals search engine

Disable network protocols (optional)

By factory default, all supported network protocols are enabled. Disabling unused protocols has the following benefits:

- Decreases product-generated network traffic
- Prevents unauthorized users from printing to the product
- Provides only pertinent information on the configuration page
- Allows the product control panel to display protocol-specific error and warning messages

Disable IPX/SPX, AppleTalk, or DLC/LLC

NOTE: Do not disable IPX/SPX in Windows-based systems that print through IPX/SPX.

1. Press the Menu button .
2. Open each of the following menus. Press the down arrow ▼ to highlight it and then press the OK button to select it.
   a. **CONFIGURE DEVICE**
   b. **I/O**
   c. **EMBEDDED JETDIRECT MENU**
   d. **IPX/SPX**, **APPLETALK**, or **DLC/LLC**
   e. **ENABLE**
   f. **OFF**
3. Press the Menu button to return to the **Ready** state.

Downloaded from www.Manualslib.com manuals search engine

Link speed and duplex settings

The link speed and communication mode of the print server must match the network. For most situations, leave the product in automatic mode. Incorrect changes to the link speed and duplex settings might prevent the product from communicating with other network devices. If you need to make changes, use the product control panel.

NOTE: Making changes to these settings causes the product to turn off and then on. Make changes only when the product is idle.

1. Press the Menu button .
2. Open each of the following menus. Press the down arrow ▼ to highlight it and then press the OK button to select it.
   a. **CONFIGURE DEVICE**
   b. **I/O**
   c. **EMBEDDED JETDIRECT MENU**
   d. **LINK SPEED**
3. Press the down arrow ▼ to highlight one of the following options.

Setting	Description
AUTO	The print server automatically configures itself for the highest link speed and communication mode allowed on the network.
10T HALF	10 megabytes per second (Mbps), half-duplex operation
10T FULL	10 Mbps, full-duplex operation
100TX HALF	100 Mbps, half-duplex operation
100TX FULL	100 Mbps, full-duplex operation
100TX AUTO	Limits auto-negotiation to a maximum link speed of 100 Mbps
1000TX FULL	1000 Mbps, full-duplex operation

4. Press the OK button. The product turns off and then on.

Downloaded from www.Manualslib.com manuals search engine

Downloaded from www.Manualslib.com manuals search engine

6 Paper and print media

- Understand paper and print media use
- Supported paper and print media sizes
- Custom paper sizes
- Supported paper and print media types
- Tray and bin capacity
- Special paper or print media guidelines
- Load trays
- Configure trays
- Use paper output options

Downloaded from www.Manualslib.com manuals search engine

Understand paper and print media use

This product supports a variety of paper and other print media in accordance with the guidelines in this user guide. Paper or print media that does not meet these guidelines might cause poor print quality, increased jams, and premature wear on the product.

For best results, use only HP-brand paper and print media designed for laser printers or multiuse. Do not use paper or print media made for inkjet printers. Hewlett-Packard Company cannot recommend the use of other brands of media because HP cannot control their quality.

It is possible for paper to meet all of the guidelines in this user guide and still not produce satisfactory results. This might be the result of improper handling, unacceptable temperature and/or humidity levels, or other variables over which Hewlett-Packard has no control.

△ **CAUTION:** Using paper or print media that does not meet Hewlett-Packard's specifications might cause problems for the product, requiring repair. This repair is not covered by the Hewlett-Packard warranty or service agreements.

Downloaded from www.Manualslib.com manuals search engine

Supported paper and print media sizes

NOTE: To obtain best results, select the correct paper size and type in the printer driver before printing.

Table 6-1 Supported paper and print media sizes

Size and dimensions	Tray 1	Tray 2 and the optional 500-sheet trays	Duplexer (d, dn, and x models only)
Letter 216 x 279 mm (8.5 x 11 in)	✓	✓	✓
Legal 216 x 356 mm (8.5 x 14 in)	✓	✓	✓
Executive 184 x 267 mm (7.24 x 10.51 in)	✓	✓	
Statement 140 x 216 mm (5.5 x 8.5 in)	✓	✓	
8.5 x 13 216 x 330 mm (8.5 x 13 in)	✓	✓	✓
3 x 5 76 x 127 mm (3 x 5 in)	✓		
4 x 6 102 x 152 mm (4 x 6 in)	✓		
5 x 7 127 x 188 mm (5 x 7 in)	✓	✓	
5 x 8 127 x 203 mm (5 x 8 in)	✓	✓	
A4 210 x 297 mm (8.27 x 11.69 in)	✓	✓	✓
A5 148 x 210 mm (5.83 x 8.27 in)	✓	✓	
A6 105 x 148 mm (4.1 x 5.8 in)	✓	✓	
B5 (JIS) 182 x 257 mm (7.2 x 10.1 in)	✓	✓	
B6 (JIS) 128 x 182 mm (5.0 x 7.2 in)	✓	✓	

Downloaded from www.Manualslib.com manuals search engine

Table 6-1 Supported paper and print media sizes (continued)

Size and dimensions	Tray 1	Tray 2 and the optional 500-sheet trays	Duplexer (d, dn, and x models only)
10 x 15 cm 100 x 150 mm (3.9 x 5.9 in)	✓		
16K 184 x 260 mm (7.2 x 10.2 in)	✓	✓	
16K 195 x 270 mm (7.7 x 10.6 in)	✓	✓	
16K 197 x 273 mm (7.8 x 10.8 in)	✓	✓	
Double Postcard (JIS) 148 x 200 mm (5.8 x 7.9 in)	✓	✓	
Custom 76 x 127 mm to 216 x 356 mm (3.0 x 5.0 in to 8.5 x 14 in)	✓		
Custom 105 x 148 mm to 216 x 356 mm (4.13 x 5.83 in to 8.5 x 14 in)		✓	
Custom 210 x 280 mm to 216 x 356 mm (8.27 x 11 in to 8.5 x 14 in)			✓
Envelope Commercial #10 105 x 241 mm (4.13 x 9.49 in)	✓		
Envelope DL ISO 110 x 220 mm (4.33 x 8.66 in)	✓		
Envelope C5 ISO 162 x 229 mm (6.93 x 9.84 in)	✓		
Envelope B5 ISO 176 x 250 mm (6.7 x 9.8 in)	✓		
Envelope Monarch #7-3/4 98 x 191 mm (3.9 x 7.5 in)	✓		

Downloaded from www.Manualslib.com manuals search engine

Custom paper sizes

This product supports a variety of custom paper sizes that are within the minimum- and maximum-size guidelines for the product but are not listed in the supported paper sizes table. When using a supported custom size, specify the custom size in the print driver, and load the paper in a tray that supports custom sizes.

Downloaded from www.Manualslib.com manuals search engine

Supported paper and print media types

For a complete list of specific HP-brand paper that this product supports, go to www.hp.com/support/ljp3010series.

Paper type (control panel)	Paper type (printer driver)	Tray 1	Tray 2 and optional 500-sheet trays	Automatic duplex printing
PLAIN	Plain	✓	✓	✓
LIGHT 60–74 G/M2	Light 60-75g	✓	✓	✓
BOND	Bond	✓	✓	✓
RECYCLED	Recycled	✓	✓	✓
MIDWEIGHT 96–110 G/M2	Midweight	✓	✓	✓
HEAVY 111–130 G/M2	Heavy	✓	✓	✓
EXTRA HEAVY 131–175 G/M2	Extra Heavy	✓		
CARDSTOCK	Cardstock	✓		
MONO TRANSPARENCY	Monochrome Laser Transparency	✓		
LABELS	Labels	✓		
LETTERHEAD	Letterhead	✓	✓	✓
ENVELOPE	Envelope	✓		
PREPRINTED	Preprinted	✓	✓	✓
PREPUNCHED	Prepunched	✓	✓	✓
COLORED	Colored	✓	✓	✓
ROUGH	Rough	✓		

Downloaded from www.Manualslib.com manuals search engine

Tray and bin capacity

Tray or bin	Paper type	Specifications	Quantity
Tray 1	Paper	Range: 60 g/m^2 (16 lb) bond to 199 g/m^2 (53 lb) bond	Maximum stack height: 12 mm (0.5 in) Equivalent to 100 sheets of 75 g/m^2 (20 lb) bond
	Envelopes	75 g/m^2 (20 lb) bond to 90 g/m^2 (24 lb) bond	Up to 10 envelopes
	Labels	0.10 to 0.14 mm (0.004 to 0.005 in) thick	Maximum stack height: 12 mm (0.5 in)
	Transparencies	0.10 to 0.14 mm (0.004 to 0.005 in) thick	Maximum stack height: 12 mm (0.5 in)
Tray 2 and the optional 500-sheet trays	Paper	Range: 60 g/m^2 (16 lb) bond to 120 g/m^2 (32 lb) bond	Equivalent to 500 sheets of 75 g/m^2 (20 lb) bond
Standard top bin	Paper		Up to 250 sheets of 75 g/m^2 (20 lb) bond
Rear bin	Paper		Up to 50 sheets of 75 g/m^2 (20 lb) bond
Duplexer	Paper	Range: 60 g/m^2 (16 lb) bond to 120 g/m^2 (32 lb) bond	

Downloaded from www.Manualslib.com manuals search engine

Special paper or print media guidelines

This product supports printing on special media. Use the following guidelines to obtain satisfactory results. When using special paper or print media, be sure to set the type and size in the printer driver to obtain the best results.

△ **CAUTION:** HP LaserJet products use fusers to bond dry toner particles to the paper in very precise dots. HP laser paper is designed to withstand this extreme heat. Using inkjet paper could damage the product.

Media type	Do	Do not
Envelopes	• Store envelopes flat. • Use envelopes where the seam extends all the way to the corner of the envelope. • Use peel-off adhesive strips that are approved for use in laser printers.	• Do not use envelopes that are wrinkled, nicked, stuck together, or otherwise damaged. • Do not use envelopes that have clasps, snaps, windows, or coated linings. • Do not use self-stick adhesives or other synthetic materials.
Labels	• Use only labels that have no exposed backing between them. • Use labels that lie flat. • Use only full sheets of labels.	• Do not use labels that have wrinkles or bubbles, or are damaged. • Do not print partial sheets of labels.
Transparencies	• Use only transparencies that are approved for use in laser printers. • Place transparencies on a flat surface after removing them from the product.	• Do not use transparent print media not approved for laser printers.
Letterhead or preprinted forms	• Use only letterhead or forms approved for use in laser printers.	• Do not use raised or metallic letterhead.
Heavy paper	• Use only heavy paper that is approved for use in laser printers and meets the weight specifications for this product.	• Do not use paper that is heavier than the recommended media specification for this product unless it is HP paper that has been approved for use in this product.
Glossy or coated paper	• Use only glossy or coated paper that is approved for use in laser printers.	• Do not use glossy or coated paper designed for use in inkjet products.

Downloaded from www.Manualslib.com manuals search engine

Load trays

Paper orientation for loading trays

If you are using paper that requires a specific orientation, load it according to the information in the following table.

Tray	Single-sided printing	Automatic duplex printing	Envelopes
Tray 1	Face-up Top edge leading into the product 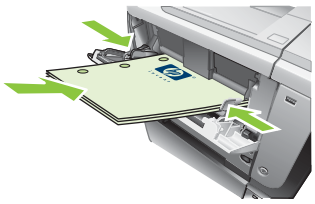	Face-down Bottom edge leading into the product 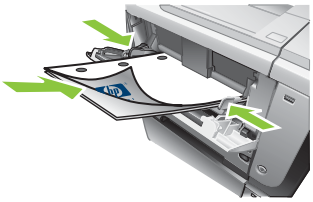	Face-up Short, postage end leading into the product 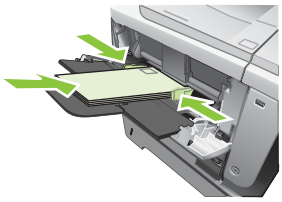
All other trays	Face-down Top edge at the front of the tray 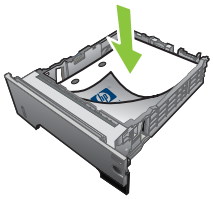	Face-up Bottom edge at the front of the tray 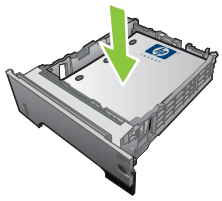	Print envelopes only from Tray 1.

Downloaded from www.Manualslib.com manuals search engine

Load Tray 1

NOTE: The product might print at a slower speed when using Tray 1.

CAUTION: To avoid jams, do not load trays while the product is printing. Do not fan the paper. Fanning can cause misfeeds.

TIP: To see an animation of this procedure go to this Web site: www.hp.com/go/ljp3010-load-tray1.

1. Open Tray 1.

2. Pull out the tray extension.

Downloaded from www.Manualslib.com manuals search engine

3. Load the paper into the tray. Make sure that the paper fits under the tabs and below the maximum-height indicators.

NOTE: For information about loading paper that requires a specific orientation, see Paper orientation for loading trays on page 81.

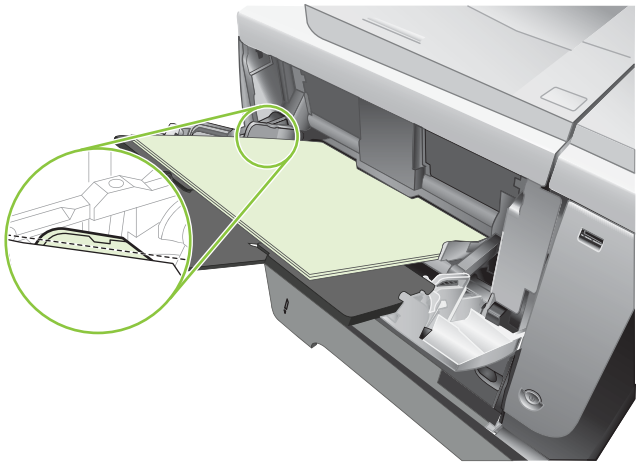

4. Adjust the side guides so that they lightly touch the paper stack but do not bend the paper.

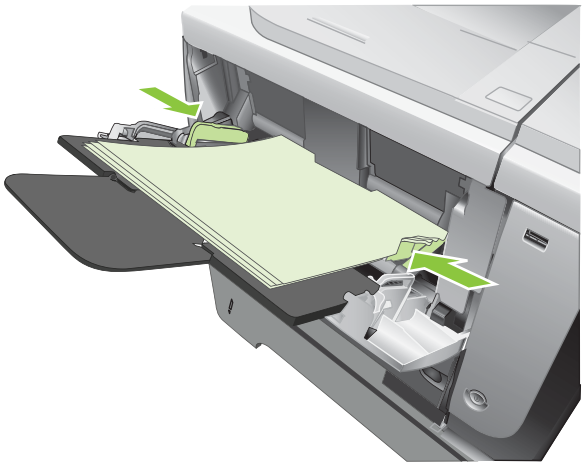

Downloaded from www.Manualslib.com manuals search engine

Load Tray 2 or an optional 500-sheet tray

△ **CAUTION:** To avoid jams, do not load trays while the product is printing.

CAUTION: Do not fan the paper. Fanning can cause misfeeds.

TIP: To see an animation of this procedure go to this Web site: www.hp.com/go/ljp3010-load-tray2.

1. Pull the tray out and lift up slightly to remove it completely from the product.

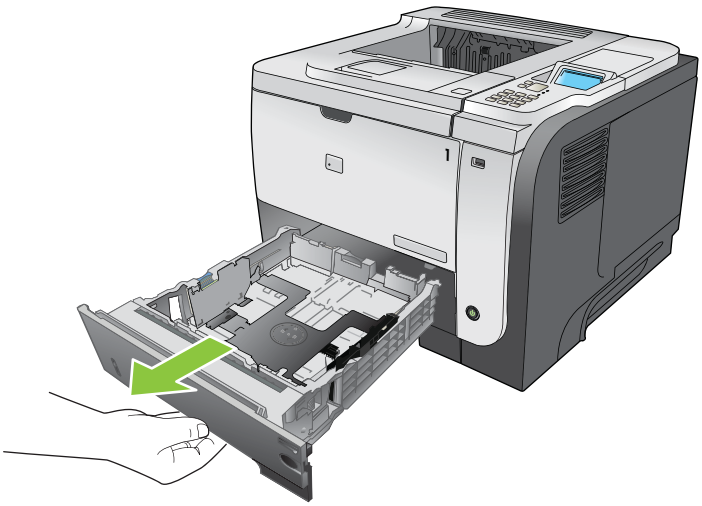

2. Pinch the release that is located on the left guide and slide the side guides to the correct paper size.

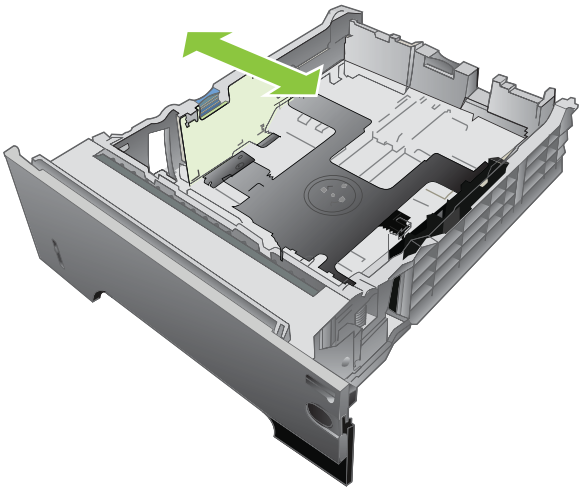

Downloaded from www.Manualslib.com manuals search engine

3. Pinch the release that is located on the rear paper guide and slide it to the correct paper size.

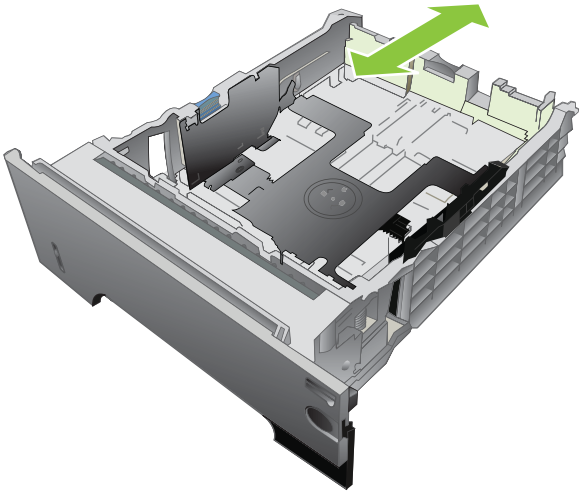

Downloaded from www.Manualslib.com manuals search engine

4. Load the paper into the tray. Make sure that the stack is flat at all four corners and that the top of the stack is below the maximum-height indicators.

NOTE: For information about loading paper that requires a specific orientation, see Paper orientation for loading trays on page 81.

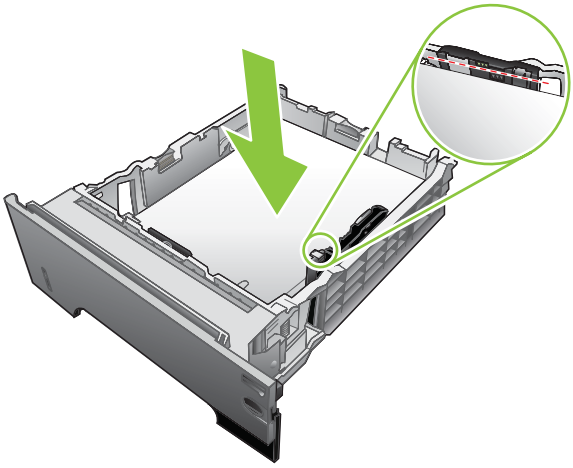

For A6-size paper, stack the paper no higher than the bottom height indicator.

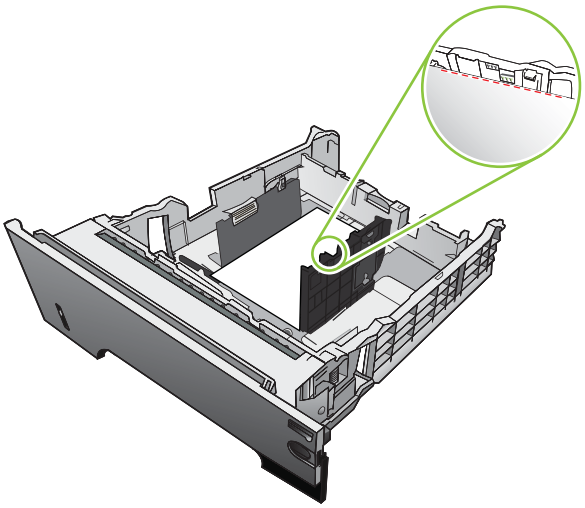

5. Slide the tray completely into the product.

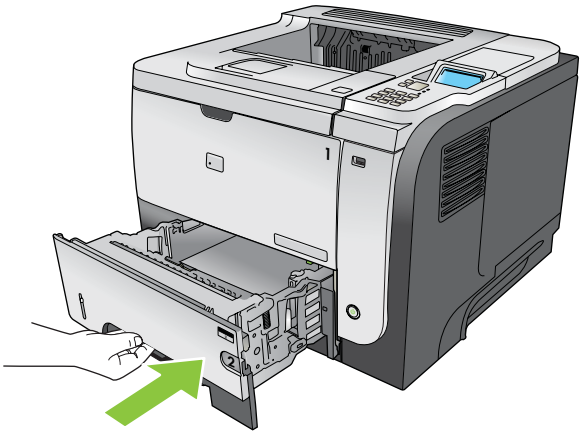

Downloaded from www.Manualslib.com manuals search engine

Configure trays

NOTE: If you have used other HP LaserJet product models, you might be accustomed to configuring Tray 1 to **First** mode or **Cassette** mode. For this product, setting **TRAY 1 SIZE** to the **ANY SIZE** setting and setting **TRAY 1 TYPE** to **ANY TYPE** is equivalent to **First** mode. Setting **TRAY 1 SIZE** and **TRAY 1 TYPE** to any other settings is equivalent to **Cassette** mode.

The product automatically prompts you to configure a tray for type and size in the following situations:

- When you load paper into the tray
- When you specify a particular tray or paper type for a print job through the printer driver or a software program and the tray is not configured to match the print-job's settings

The following message appears on the control panel: **TRAY <X> [TYPE] [SIZE] To change size or type press OK**. **To accept settings press** ⮌.

NOTE: The prompt does not appear if you are printing from Tray 1, and it is configured for the **ANY SIZE** and **ANY TYPE** settings.

Configure a tray when loading paper

1. Load paper in the tray. Close the tray if you are using Tray 2, 3, or 4.
2. The tray configuration message appears.
3. Press the back arrow ⮌ to accept the size and type, or press the OK button to choose a different paper size or paper type.
4. To modify the tray size configuration, press the down arrow ▼ to highlight the correct size, and then press the OK button.
5. To modify the tray type configuration, press the down arrow ▼ to highlight the correct type, and then press the OK button.

Configure a tray to match print job settings

1. In the software program, specify the source tray, the paper size, and the paper type, and then click **Print**.
2. If the tray needs to be configured, the **LOAD TRAY <X> [TYPE] [SIZE]** message appears.
3. Load the tray with the specified type and size of paper, and then close the tray.
4. When the **TRAY <X> SIZE = <Size>** message appears, press the OK button to confirm the size.

   To specify a custom size, first press the down arrow ▼ to highlight the correct unit of measure. Use the up or down arrows ▲▼ to set the X and Y dimensions, and then press the OK button.
5. When the **TRAY<X> TYPE=<TYPE>** message appears, press the OK button to confirm the type and continue with the job.

Configure a tray by using the Paper Handling menu

1. Press the Menu button.
2. Press the down arrow ▼ to highlight the **PAPER HANDLING** menu, and then press the OK button.

Downloaded from www.Manualslib.com manuals search engine

3. Press the down arrow ▼ to highlight the size or type setting for the desired tray, and then press the OK button.

4. Press the up arrow ▲ or the down arrow ▼ to highlight the size or type. If you select a custom size, select the unit of measure, and then set the X dimension and the Y dimension.

5. Press the OK button to save your selection.

6. Press the Menu button to exit the menus.

Select the paper by source, type, or size

Three settings affect how the printer driver tries to pull paper when you send a print job. *Source*, *Type*, and *Size* settings appear in the **Page Setup**, **Print**, or **Print Properties** dialog boxes in most software programs. Unless you change these settings, the product automatically selects a tray, using the default settings.

Source

To print by *source*, select a specific tray for the product to pull from. If you select a tray that is configured for a type or size that does not match your print job, the product prompts you to load the tray with the type or size of paper for your job before printing it. When you load the tray, the product begins printing.

Type and size

Printing by *type* or *size* means that you want the product to pull from the tray that is loaded with the correct type and size of paper. Selecting paper by type rather than source is similar to locking out trays and helps protect special paper from accidental use. For example, if a tray is configured for letterhead and you select plain paper, the product will not pull the letterhead from that tray. Instead, it will pull from a tray that is loaded with plain paper and is configured for plain paper on the product control panel.

Selecting paper by type and size results in significantly better print quality for most paper types. Using the wrong setting might result in unsatisfactory print quality. Always print by type for special print media, such as labels or transparencies. Print by size for envelopes, if possible.

- To print by type or size, select the type or size from the **Page Setup** dialog box, the **Print** dialog box, or the **Print Properties** dialog box, depending on the software program.
- If you often print on a certain type or size of paper, configure a tray for that type or size. Then, when you select that type or size as you print a job, the product automatically pulls paper from the tray that is configured for that type or size.

Downloaded from www.Manualslib.com manuals search engine

Use paper output options

Print to the top (standard) output bin

The top output bin collects paper face-down, in the correct order. The top output bin should be used for most print jobs, including transparencies. To use the top output bin, be sure that the rear output bin is closed. To avoid jams, do not open or close the rear output bin while the product is printing.

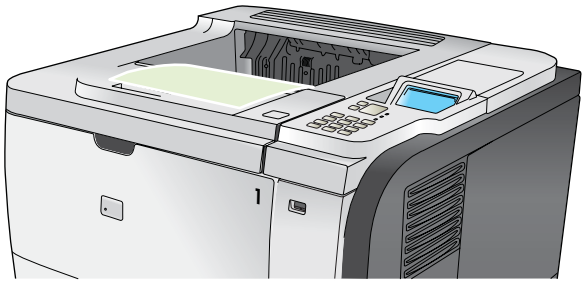

Print to the rear output bin

The product always prints to the rear output bin if it is open. Paper that is printed to this bin will exit face-up, with the last page on top (reverse order).

Printing from Tray 1 to the rear output bin provides the straightest path. Opening the rear output bin might improve performance with the following items:

- Envelopes
- Labels
- Small custom-size paper
- Postcards
- Paper heavier than 120 g/m^2 (32 lb)

To open the rear output bin, grasp the handle at the top of the bin. Pull the bin down to a 45° angle, and slide out the extension.

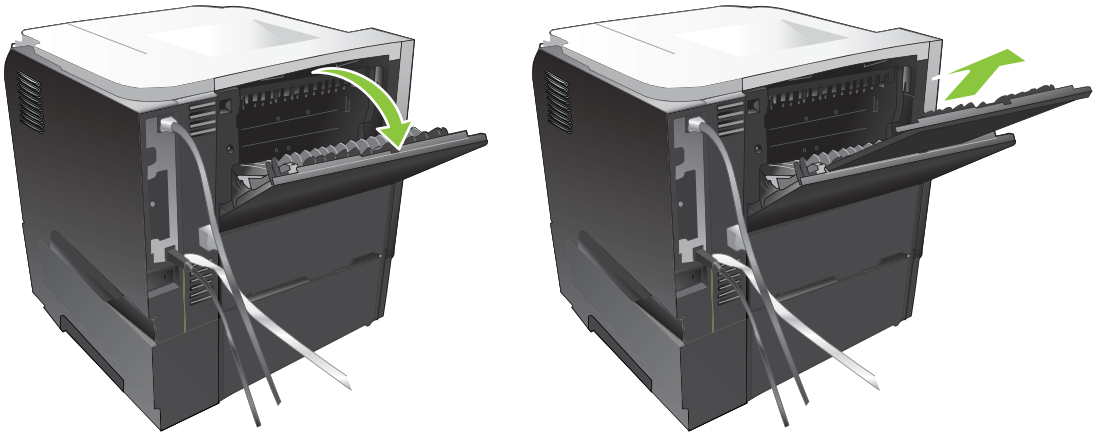

Opening the rear output bin makes the duplexer and the top output bin unavailable. To avoid jams, do not open or close the rear output bin while the product is printing.

Downloaded from www.Manualslib.com manuals search engine

Downloaded from www.Manualslib.com manuals search engine

7 Use product features

- Economy settings
- Use job-storage features
- Walk-up USB printing

Downloaded from www.Manualslib.com manuals search engine

Economy settings

EconoMode

This product has an EconoMode option for printing drafts of documents. Using EconoMode can use less toner and decrease the cost per page. However, using EconoMode can also reduce print quality.

HP does not recommend full-time use of EconoMode. If EconoMode is used full-time, the toner supply might outlast the mechanical parts in the print cartridge. If print quality begins to degrade under these circumstances, you will need to install a new print cartridge, even if there is toner supply remaining in the cartridge.

Enable or disable EconoMode in any of these ways:

- At the product control panel, select the **CONFIGURE DEVICE** menu, and then select the **PRINT QUALITY** submenu. EconoMode is turned off by default.
- In the embedded Web server, open the **Settings** tab and select the **Configure Device** option. Navigate to the **Print Quality** submenu.
- In the HP Printer Utility for Macintosh, click **Configuration Settings**, and then click **Economode & Toner Density**.
- In the Windows PCL printer driver, open the **Paper/Quality** tab, and select the **EconoMode** option.

Downloaded from www.Manualslib.com manuals search engine

Sleep delay

The adjustable sleep mode feature reduces power consumption when the product has been inactive for an extended period. You can set the length of time before the product enters sleep mode. The default setting is **30 MINUTES**.

NOTE: The product display dims when the product is in sleep mode. This mode does not affect product warm-up time.

Set sleep delay

1. Press the Menu button .
2. Open each of the following menus. Press the down arrow ▼ to highlight it and then press the OK button to select it.
   a. **CONFIGURE DEVICE**
   b. **SYSTEM SETUP**
   c. **SLEEP DELAY**
3. Press the up or down arrow ▲/▼ to select the appropriate time period, and then press the OK button.
4. Press the Menu button .

Disable or enable sleep mode

1. Press the Menu button .
2. Open each of the following menus. Press the down arrow ▼ to highlight it and then press the OK button to select it.
   a. **CONFIGURE DEVICE**
   b. **RESETS**
   c. **SLEEP MODE**
3. Press the up arrow or down arrow ▲/▼ to select the **ON** or **OFF** setting, and then press the OK button.
4. Press the Menu button .

Downloaded from www.Manualslib.com manuals search engine

Wake time

The wake time feature allows you to instruct the product to wake at a certain time on selected days, to eliminate waiting for the warm-up and calibration periods. You must have the **SLEEP MODE** setting on to set the wake time.

NOTE: Make sure that the real-time clock is set to the correct date and time before you set the wake time.

Set the real-time clock

Use the real-time clock feature to set the date and time settings. The date and time information is attached to stored print jobs, so you can identify the most recent versions.

Access the **DATE/TIME** menu	1. Press the Menu button. 2. Open each of the following menus. Press the down arrow ▼ to highlight it and then press the OK button to select it. a. **CONFIGURE DEVICE** b. **SYSTEM SETUP** c. **DATE/TIME**
Set the date	1. From the **DATE/TIME** menu, highlight and select the **DATE** menu. 2. Use the numeric keypad, or press the up arrow or down arrow ▲/▼ to select the year, month, and day. Press the OK button after each selection.
Set the date format	1. From the **DATE/TIME** menu, highlight and select the **DATE FORMAT** menu. 2. Press the up arrow or down arrow ▲/▼ to select the date format, and then press the OK button.
Set the time	1. From the **DATE/TIME** menu, highlight and select the **TIME** menu. 2. Use the numeric keypad, or press the up arrow or down arrow ▲/▼ to select the hour, minute, and AM/PM setting. Press the OK button after each selection.
Set the time format	1. From the **DATE/TIME** menu, highlight and select the **TIME FORMAT** menu. 2. Press the up arrow or down arrow ▲/▼ to select the time format, and then press the OK button.

Set the wake time

1. Press the Menu button.
2. Open each of the following menus. Press the down arrow ▼ to highlight it and then press the OK button to select it.
   a. **CONFIGURE DEVICE**
   b. **SYSTEM SETUP**
   c. **WAKE TIME**
3. Press the up arrow or down arrow ▲/▼ to select the day of the week, and then press the OK button.
4. Press the down arrow ▼ to select the **CUSTOM** setting, and then press the OK button.

Downloaded from www.Manualslib.com manuals search engine

5. Use the numeric keypad, or press the up arrow or down arrow ▲/▼ to select the hour, minutes, and the AM or PM setting. Press the OK button after each selection.

6. Press the OK button to enter the **APPLY TO ALL DAYS** menu.

7. Press the up arrow or down arrow ▲/▼ to select the **YES** or the **NO** setting, and then press the OK button.

8. If you select **NO**, use the up arrow or down arrow ▲/▼ to set the **WAKE TIME** setting for the other days of the week, and then press the OK button to accept each selection.

9. Press the Menu button .

Downloaded from www.Manualslib.com manuals search engine

Use job-storage features

The following job-storage features are available for print jobs:

- **Proof and hold jobs**: This feature provides a quick way to print and proof one copy of a job and then print the additional copies from the control panel.
- **Personal jobs**: When you send a private job to the product, the job does not print until you provide the required personal identification number (PIN) at the control panel.
- **Quick Copy jobs**: Print the requested number of copies of a job and then store a copy of the job on the product.
- **Stored jobs**: Store a job such as a personnel form, time sheet, or calendar on the product, so other users to print the job at any time. Stored jobs also can be protected by a PIN.

△ **CAUTION:** If you turn off the product, all Quick Copy, Proof and Hold, and Personal jobs are deleted.

Create a stored job

Use the printer driver to create stored jobs.

Windows	1. On the **File** menu, click **Print**. 2. Click **Properties**, and then click the **Job Storage** tab. 3. Select the job storage mode that you want. For more information, see Set job storage options on page 104.
Macintosh	1. On the **File** menu, click the **Print** option. 2. Open the **Job Storage** menu. 3. In the **Job Storage Mode** drop-down list, select the type of stored job. For more information, see Store jobs on page 61.

NOTE: To permanently store the job and prevent the product from deleting it when space is needed for something else, select the **Stored Job** option in the driver.

Print a stored job

1. If the product has a numeric keypad, press the folder button to open the **RETRIEVE JOB** menu.

   -or-

   Press the Menu button. Press the down arrow ▼ to highlight the **RETRIEVE JOB** menu, and then press the OK button.

2. Press the down arrow ▼ to highlight your user name, and then press the OK button.
3. Press the down arrow ▼ to highlight a job name, and then press the OK button.

   The **PRINT** or **PRINT AND DELETE** option is highlighted.

4. Press the OK button to select the **PRINT** or **PRINT AND DELETE** option.

Downloaded from www.Manualslib.com manuals search engine

5. If the job requires a PIN, use the numeric keypad, or press the up arrow ▲ or the down arrow ▼ to enter the PIN, and then press the OK button.

   NOTE: If you use the up arrow ▲ or the down arrow ▼ to enter the PIN, press the OK button after each digit.

6. To print the number of copies specified in the driver when the job was stored, press the OK button.

   -or-

   To print a different number of copies than you specified in the driver when you stored the job, use the numeric keypad, or press the up arrow ▲ or the down arrow ▼ to select the number of copies, and then press the OK button.

Delete a stored job

NOTE: When you send a stored job that has the same user name and job name as the previous job, the product adds a number to the end of the job name. To overwrite the previous job, use the **Replace existing file** option in the printer driver. If a job is not already stored under the same user and job name, and the product needs additional space, the product might delete other stored jobs starting with the oldest. You can change the number of jobs that can be stored from the **SYSTEM SETUP** menu on the product control panel.

You can delete a job from the control panel, from the embedded Web server, or from HP Web Jetadmin. To delete a job from the control panel, use the following procedure:

1. If the product has a numeric keypad, press the folder button to open the **RETRIEVE JOB** menu.

   -or-

   Press the Menu button. Press the down arrow ▼ to highlight the **RETRIEVE JOB** menu, and then press the OK button.

2. Press the down arrow ▼ to highlight your user name, and then press the OK button.

3. Press the down arrow ▼ to highlight a job name, and then press the OK button.

4. Press the down arrow ▼ to highlight the **DELETE** option, and then press the OK button.

5. If the job requires a PIN, use the numeric keypad, or press the up arrow ▲ or the down arrow ▼ to enter the PIN, and then press the OK button.

   NOTE: If you use the up arrow ▲ or the down arrow ▼ to enter the PIN, press the OK button after each digit.

6. For jobs that require a PIN, press the OK button to confirm that you want to delete the job.

Downloaded from www.Manualslib.com manuals search engine

Walk-up USB printing

This product features walk-up USB printing, so you can quickly print files without sending them from a computer. The product accepts standard USB storage accessories in the USB port on the front of the product. You can print the following types of files:

- .PDF
- .PCL
- .PS

1. Insert the USB storage accessory into the USB port on the front of the product.

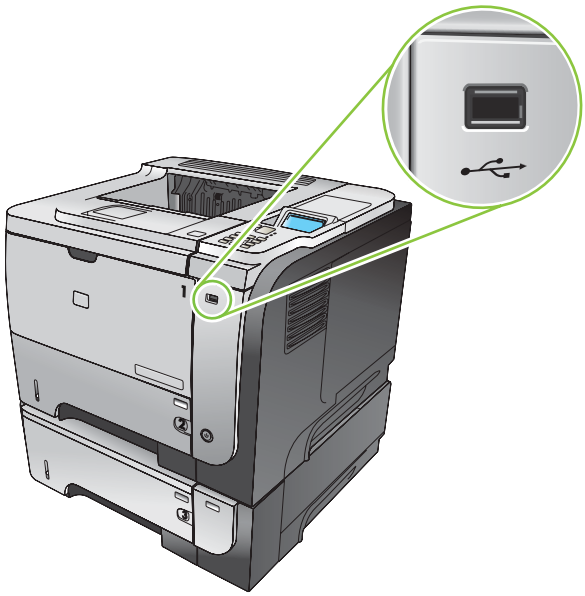

2. The **USB STORAGE** menu opens. Press the up arrow ▲ or the down arrow ▼ to highlight the folder name or the job name, and press the OK button.
3. Use the numeric keypad, or press the up arrow ▲ or the down arrow ▼ to select the number of copies to print, and then press the OK button.
4. To print more files, press the OK button to return to the **USB STORAGE** menu.
5. Retrieve the printed job from the output bin, and remove the USB storage accessory.

NOTE: The **USB STORAGE** menu displays for a short time and then the product returns to the **Ready** state. To open the menu again, open the **RETRIEVE JOB** menu, and then open the **USB STORAGE** menu.

Downloaded from www.Manualslib.com manuals search engine

8 Print tasks

- Cancel a print job
- Use features in the Windows printer driver

Downloaded from www.Manualslib.com manuals search engine

Cancel a print job

NOTE: It can take some time for all printing to clear after you have canceled a print job.

Stop the current print job from the control panel

1. Press the stop button ⊗ on the control panel.
2. Press the down arrow ▼ to highlight the **CANCEL CURRENT JOB** option, and then press the OK button.

Stop the current print job from the software program

When you send the print job, a dialog box appears briefly on the screen, giving you the option to cancel the print job.

If several requests have been sent to the product through your software, they might be waiting in a print queue (for example, in Windows Print Manager). See the software documentation for specific instructions about canceling a print request from the computer.

If a print job is waiting in a print queue or print spooler, delete the print job there.

1. **Windows XP, Windows Server 2003, and Windows Server 2008 (using the default Start menu view):** Click **Start**, click **Settings**, and then click **Printers and Faxes**.

   -or-

   Windows 2000, Windows XP, Windows Server 2003, and Windows Server 2008 (using the Classic Start menu view): Click **Start**, click **Settings**, and then click **Printers**.

   -or-

   Windows Vista: Click **Start**, click **Control Panel**, and then in the category for **Hardware and Sound** click **Printer**.
2. In the list of printers, double-click the name of this product to open the print queue or spooler.
3. Select the print job that you want to cancel, and then press Delete.

Downloaded from www.Manualslib.com manuals search engine

Use features in the Windows printer driver

NOTE: The following information is for the HP PCL 6 printer driver.

Open the printer driver

How do I	Steps to perform
Open the printer driver	On the **File** menu in the software program, click **Print**. Select the printer, and then click **Properties** or **Preferences**.
Get help for any printing option	Click the **?** symbol in the upper-right corner of the printer driver, and then click any item in the printer driver. A pop-up message displays that provides information about the item. Or, click **Help** to open the online Help.

Use printing shortcuts

To perform the following tasks, open the printer driver and click the **Printing Shortcuts** tab.

How do I	Steps to perform
Use a printing shortcut	Select one of the shortcuts, and then click **OK** to print the job with the predefined settings. **NOTE:** Always select a shortcut before adjusting any of the settings on the right side of the screen. If you adjust the settings and then select a shortcut, all your adjustments are lost.
Create a custom printing shortcut	a) Select an existing shortcut as a base. b) Select the print options for the new shortcut. c) Click **Save As**, type a name for the shortcut, and click **OK**. **NOTE:** Always select a shortcut before adjusting any of the settings on the right side of the screen. If you adjust the settings and then select a shortcut, all your adjustments are lost.

Downloaded from www.Manualslib.com manuals search engine

Set paper and quality options

To perform the following tasks, open the printer driver and click the **Paper/Quality** tab.

How do I	Steps to perform
Select a page size	Select a size from the **Paper size** drop-down list.
Select a custom page size	a) Click **Custom**. The **Custom Paper Size** dialog box opens. b) Type a name for the custom size, specify the dimensions, and click **OK**.
Select a paper source	Select a tray from the **Paper source** drop-down list.
Select a paper type	Select a type from the **Paper type** drop-down list.
Print covers on different paper Print the first or last page on different paper	a) In the **Special pages** area, click **Covers** or **Print pages on different paper**, and then click **Settings**. b) Select an option to print a blank or preprinted front cover, back cover, or both. Or, select an option to print the first or last page on different paper. c) Select options from the **Paper source** and **Paper type** drop-down lists, and then click **Add**. d) Click **OK**.
Adjust the resolution of printed images	In the **Print Quality** area, select an option from the drop-down list. See the printer-driver online Help for information about each of the available options.
Select draft-quality printing	In the **Print Quality** area, click **EconoMode**.

Set document effects

To perform the following tasks, open the printer driver and click the **Effects** tab.

How do I	Steps to perform
Scale a page to fit on a selected paper size	Click **Print document on**, and then select a size from the drop-down list.
Scale a page to be a percent of the actual size	Click **% of actual size**, and then type the percent or adjust the slider bar.
Print a watermark	a) Select a watermark from the **Watermarks** drop-down list. b) To print the watermark on the first page only, click **First page only**. Otherwise, the watermark is printed on each page.
Add or edit watermarks **NOTE:** The printer driver must be stored on your computer for this to work.	a) In the **Watermarks** area, click **Edit**. The **Watermark Details** dialog box opens. b) Specify the settings for the watermark, and then click **OK**.

Downloaded from www.Manualslib.com manuals search engine

Set document finishing options

To perform the following tasks, open the printer driver and click the **Finishing** tab.

How do I	Steps to perform
Manually print on both sides (duplex) **NOTE:** This information applies to products that do not have an automatic duplexer.	1. Load paper face-up in Tray 1 or face-down in Tray 2. 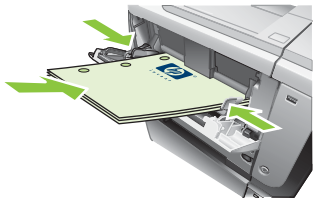 2. In the printer driver, select the **Print on both sides (manually)** check box. If you will bind the document along the top edge, select the **Flip pages up** check box. 3. Click the **OK** button to print the first side of the job. 4. Retrieve the printed stack from the output bin, and place it with the printed-side facing down in Tray 1 or facing up in Tray 2. 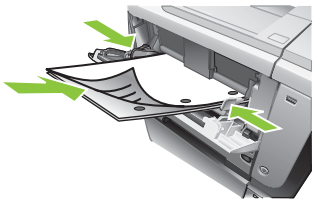 5. Press the OK button to print the second side of the job.
Automatically print on both sides (duplex) **NOTE:** This information applies to products that have an automatic duplexer.	1. Load paper face-up in Tray 2. 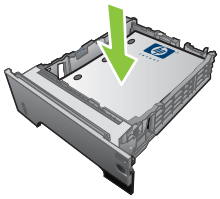 2. In the printer driver, select the **Print on both sides** check box. If you will bind the document along the top edge, select the **Flip pages up** check box. 3. Click the **OK** button to print the job.
Print a booklet	a) Select the **Print on both sides** check box. b) In the **Booklet layout** drop-down list, click the **Left binding** or **Right binding** option. The **Pages per sheet** option automatically changes to **2 pages per sheet**.
Print multiple pages per sheet	a) Select the number of pages per sheet from the **Pages per sheet** drop-down list. b) Select the correct options for **Print page borders**, **Page order**, and **Orientation**.
Select page orientation	a) In the **Orientation** area, select the **Portrait** or **Landscape** option. b) To print the page image upside down, select the **Rotate by 180 degrees** option.

Downloaded from www.Manualslib.com manuals search engine

Set job storage options

To perform the following tasks, open the printer driver and click the **Job Storage** tab.

How do I	Steps to perform
Print one copy for proof before printing all the copies	In the **Job Storage Mode** area, click **Proof and Hold**. The product prints the first copy only. A message appears on the product control panel that prompts you to print the rest of the copies.
Temporarily store a private job on the product and print it later	a) In the **Job Storage Mode** area, click **Personal Job**. b) In the **Make Job Private** area, enter a 4-digit personal identification number (PIN).
Temporarily store a job on the product **NOTE:** These jobs are deleted if the product is turned off.	In the **Job Storage Mode** area, click **Quick Copy**. One copy of the job is printed immediately, but you can print more copies from the product control panel.
Permanently store a job on the product	In the **Job Storage Mode** area, click **Stored Job**.
Make a permanently stored job private so that anyone who tries to print it must provide a PIN	a) In the **Job Storage Mode** area, click **Stored Job**. b) In the **Make Job Private** area, click **PIN to print**, and then enter a 4-digit personal identification number (PIN).
Receive notification when someone prints a stored job	In the **Job Notification Options** area, click **Display Job ID when printing**.
Set the user name for a stored job	In the **User Name** area, click **User name** to use the Windows default user name. To provide a different user name, click **Custom** and type the name.
Specify a name for the stored job	a) In the **Job Name** area, click **Automatic** to use the default job name. To specify a job name, click **Custom** and type the name. b) Select an option from the **If job name exists** drop-down list. Select **Use Job Name + (1-99)** to add a number to the end of the existing name, or select **Replace Existing File** to overwrite a job that already has that name.

Obtain support and product-status information

To perform the following tasks, open the printer driver and click the **Services** tab.

How do I	Steps to perform
Obtain support information for the product and order supplies online	In the **Internet Services** drop-down list, select a support option, and click **Go!**
Check the status of the product, including the level of supplies	Click the **Device and Supplies Status** icon. The **Device Status** page of the HP embedded Web server opens.

Downloaded from www.Manualslib.com manuals search engine

Set advanced printing options

To perform the following tasks, open the printer driver and click the **Advanced** tab.

How do I	Steps to perform
Select advanced printing options	In any of the sections, click a current setting to activate a drop-down list so you can change the setting.
Change the number of copies that are printed **NOTE:** If the software program that you are using does not provide a way to print a particular number of copies, you can change the number of copies in the driver. Changing this setting affects the number of copies for all print jobs. After your job has printed, restore this setting to the original value.	Open the **Paper/Output** section, and then enter the number of copies to print. If you select 2 or more copies, you can select the option to collate the pages.
Load letterhead or preprinted paper the same way for every job, whether printing on one or both sides of the page	a) Open the **Document Options** section, and then open the **Printer Features** section. b) In the **Alternative Letterhead Mode** drop-down list, select **On**. c) At the product, load the paper the same way you would for printing on both sides.
Change the order in which pages are printed	a) Open the **Document Options** section, and then open the **Layout Options** section. b) In the **Page Order** drop-down list, select **Front to Back** to print the pages in the same order as they are in the document, or select **Back to Front** to print the pages in the reverse order.

Downloaded from www.Manualslib.com manuals search engine

Downloaded from www.Manualslib.com manuals search engine

9 Manage and maintain the product

- Print the information and show-me-how pages
- Use the HP Easy Printer Care software
- Use the embedded Web server
- Use HP Web Jetadmin software
- Use security features
- Manage supplies
- Replace supplies and parts
- Install memory, internal USB devices, and external I/O cards
- Clean the product
- Upgrade the firmware

Downloaded from www.Manualslib.com manuals search engine

Print the information and show-me-how pages

From the product control panel, you can print information pages that give details about the product and its current configuration. You can also print several show-me-how pages that illustrate common procedures related to using the product.

Type of page	Name of page	Description
Information pages	**PRINT MENU MAP**	Prints the control-panel menu map that shows the layout and current settings for the control-panel menu items.
	PRINT CONFIGURATION	Prints the current product configuration. If an HP Jetdirect print server is installed, an HP Jetdirect configuration page also prints.
	PRINT SUPPLIES STATUS PAGE	Prints the approximate remaining life for the supplies: reports statistics on total number of pages and jobs processed, serial number, page counts, and maintenance information. HP provides approximations of the remaining life for the supplies as a customer convenience. The actual remaining supply levels might be different than the approximations provided.
	PRINT USAGE PAGE	Prints a page that shows a count of all paper sizes that have passed through the product, lists whether they were one-sided or two-sided, and shows a page count.
	PRINT DEMO PAGE	Prints a demonstration page.
	PRINT FILE DIRECTORY	Prints a file directory that shows information for all installed mass-storage devices. This item appears only if a mass-storage device that contains a recognized file system is installed in the product.
	PRINT PCL FONT LIST	Prints a PCL font list that shows all the PCL fonts that are currently available to the product.
	PRINT PS FONT LIST	Prints a PS font list that shows all the PS fonts that are currently available to the product.

Downloaded from www.Manualslib.com manuals search engine

Type of page	Name of page	Description
Show-me-how pages	**CLEAR JAMS**	Prints a page that shows how to clear paper jams.
	LOAD TRAYS	Prints a page that shows how to load the input trays.
	LOAD SPECIAL MEDIA	Prints a page that shows how to load special paper, such as envelopes and letterhead.
	PRINT BOTH SIDES	Prints a page that shows how to use the two-sided (duplex) printing function.
	SUPPORTED PAPER	Prints a page that shows supported paper types and sizes for the product.
	PRINT HELP GUIDE	Prints a page that shows links to additional help on the Web.
	PRODUCT VIEWS	Prints a page that explains the product components.

Print the information pages

1. Press the Menu button.
2. Press the down arrow ▼ to highlight the **INFORMATION** menu, and then press the OK button.
3. Press the down arrow ▼ to highlight the required information, and then press the OK button to print.

Print the show-me-how pages

1. Press the Menu button.
2. Make sure the **SHOW ME HOW** menu is highlighted, and then press the OK button.
3. Press the down arrow ▼ to highlight the required page, and then press the OK button to print.

Downloaded from www.Manualslib.com manuals search engine

Use the HP Easy Printer Care software

Open the HP Easy Printer Care software

Use one of the following methods to open the HP Easy Printer Care software:

- On the **Start** menu, select **Programs**, select **Hewlett-Packard**, select **HP Easy Printer Care**, and then click **Start HP Easy Printer Care**.
- In the Windows system tray (in the lower-right corner of the desktop), double-click the HP Easy Printer Care icon.
- Double-click the desktop icon.

Downloaded from www.Manualslib.com manuals search engine

HP Easy Printer Care software sections

HP Easy Printer Care software can provide information about multiple HP products that are on your network as well as any products that are directly connected to your computer. Some of the items that are in the following table might not be available for every product.

The Help button (**?**) in the upper-right corner of each page provides more detailed information about the options on that page.

Section	Options
Device List tab When you open the software, this is the first page that appears. **NOTE:** To return to this page from any tab, click **My HP Printers** in the left side of the window.	• **Devices** list: Shows the products that you can select. **NOTE:** The product information appears either in list form or as icons, depending on the setting for the **View as** option. • The information on this tab includes current alerts for the product. • If you click a product in the list, the HP Easy Printer Care opens the **Overview** tab for that product.
Compatible Printers	Provides a list of all the HP products that support HP Easy Printer Care software.
Find Other Printers window Add more products to the **My HP Printers** list	Click the **Find Other Printers** link in the **Devices** list to open the **Find Other Printers** window. The **Find Other Printers** window provides a utility that detects other network printers so that you can add them to the **My HP Printers** list and then monitor those products from your computer.
Overview tab Contains basic status information for the product	• **Device Status** section: This section shows product-identification information and the product status. It indicates product-alert conditions, such as when a print cartridge has reached is estimated end of life. After you correct a problem with the product, click the refresh button in the upper-right corner of the window to update the status. • **Supplies Status** section: Shows detailed supplies status, such as the estimated life remaining in the print cartridge and the status of the paper that is loaded in each tray. • **Supplies Details** link: Opens the supplies status page to view more detailed information about product supplies, ordering information, and recycling information.
Support tab Provides links to support information	• **Device Status** section: This section shows product-identification information and the product status. It indicates product-alert conditions, such as a print cartridge that is at its estimated end of life. After you correct a problem with the product, click the refresh button in the upper-right corner of the window to update the status. • **Device Management** section: Provides links to information about HP Easy Printer Care, to advanced product settings, and to product usage reports. • **Troubleshooting and Help**: Provides links to tools that you can use to resolve problems, to online product support information, and to online HP experts.

Downloaded from www.Manualslib.com manuals search engine

Section	Options
Settings tab Configure product settings, adjust print-quality settings, and find information about specific product features **NOTE:** This tab is not available for some products.	• **About**: Provides general information about this tab. • **General**: Provides information about the product, such as the model number, serial number, and the settings for date and time, if they are available. • **Information Pages**: Provides links to print the information pages that are available for the product. • **Capabilities**: Provides information about product features, such as duplexing, the available memory, and the available printing personalities. Click **Change** to adjust the settings. • **Print Quality**: Provides information about print-quality settings. Click **Change** to adjust the settings. • **Trays / Paper**: Provides information about the trays and how they are configured. Click **Change** to adjust the settings. • **Restore Defaults**: Provides a way to restore the product settings to the factory defaults. Click **Restore** to restore the settings to the defaults.
HP Proactive Support **NOTE:** This item is available from the **Overview** and **Support** tabs.	When enabled, HP Proactive Support routinely scans your printing system to identify potential problems. Click the **more info** link to configure how frequently the scans occur. This page also provides information about available updates for product software, firmware, and HP printer drivers. You can accept or decline each recommended update.
Supplies Ordering button Click the **Supplies Ordering** button on any tab to open the **Supplies Ordering** window, which provides access to online supplies ordering. **NOTE:** This item is available from the **Overview** and **Support** tabs.	• Ordering list: Shows the supplies that you can order for each product. To order a certain item, click the **Order** check box for that item in the supplies list. You can sort the list by product, or by the supplies that need to be ordered the soonest. The list contains supplies information for every product that is in the **My HP Printers** list. • **Shop Online for Supplies** button: Opens the HP SureSupply Web site in a new browser window. If you have checked the **Order** check box for any items, the information about those items can be transferred to the Web site, where you will receive information on options for purchasing your selected supplies. • **Print Shopping List** button: Prints the information for the supplies that have the **Order** check box selected.
Alert Settings link **NOTE:** This item is available from the **Overview** and **Support** tabs.	Click **Alert Settings** to open the Alert Settings window, in which you can configure alerts for each product. • Alerting is on or off: Activates or deactivates the alerts feature. • **Printer Alerts**: Select the option to receive alerts for critical errors only, or for any error. • **Job Alerts**: For products that support it, you can receive alerts for specific print jobs.
Color Access Control **NOTE:** This item is available only for HP color products that support Color Access Control. **NOTE:** This item is available from the **Overview** and **Support** tabs.	Use this feature to permit or restrict color printing.

Downloaded from www.Manualslib.com manuals search engine

Use the embedded Web server

Use the embedded Web server to view product and network status and to manage printing functions from your computer instead of from the product control panel.

NOTE: When the product is directly connected to a computer, use the HP Easy Printer Care software to view the product status.

- View product control-panel status information
- Determine the remaining life on all supplies and order new ones
- View and change tray configurations
- View and change the product control-panel menu configuration
- View and print internal pages
- Receive notification of product and supplies events
- View and change network configuration
- View support content that is specific to the current state of the product

To use the embedded Web server, you must have Microsoft Internet Explorer 5.01 or later or Netscape 6.2 or later for Windows, Mac OS, or Linux (Netscape only). Netscape Navigator 4.7 is required for HP-UX 10 and HP-UX 11. The embedded Web server works when the product is connected to an IP-based network. The embedded Web server does not support IPX-based product connections. You do not have to have Internet access to open and use the embedded Web server.

When the product is connected to the network, the embedded Web server is automatically available.

Open the embedded Web server by using a network connection

▲ In a supported Web browser on your computer, type the product IP address or host name in the address/URL field. To find the IP address or host name, print a configuration page. See Print the information and show-me-how pages on page 108.

Downloaded from www.Manualslib.com manuals search engine

Embedded Web server sections

Tab or section	Options
Information tab Provides product, status, and configuration information	• **Device Status**: Shows the product status and shows the estimated life remaining of HP supplies. The page also shows the type and size of print paper set for each tray. To change the default settings, click **Change Settings**. • **Configuration Page**: Shows the information found on the configuration page. • **Supplies Status**: Shows the estimated life remaining of HP supplies. This page also provides supplies part numbers. To order new supplies, click **Shop for Supplies** in the **Other Links** area on the left side of the window. • **Event Log**: Shows a list of all product events and errors. Use the **hp instant support** link (in the **Other Links** area on all embedded Web server pages) to connect to a set of dynamic Web pages that help you solve **Event Log** issues and other problems. These pages also show additional services available for the product. • **Usage Page**: Shows a summary of the number of pages the product has printed, grouped by size, type, and paper print path. • **Device Information**: Shows the product network name, address, and model information. To customize these entries, click **Device Information** on the **Settings** tab. • **Control Panel**: Shows messages from the control panel, such as **Ready** or **Sleep mode on**. • **Print**: Allows you to send print-ready jobs to the product.

Downloaded from www.Manualslib.com manuals search engine

Tab or section	Options
Settings tab Provides the ability to configure the product from your computer	• **Configure Device**: Configure product default settings. This page contains the traditional menus found on the control-panel display. • **Tray Sizes/Types**: Shows the size and type of paper and print media allowed for each input tray. • **E-mail Server**: Network only. Used in conjunction with the **Alert Subscriptions** page to set up e-mail alerts. • **Alert Subscriptions**: Network only. Set up e-mail alerts for various product and supplies events. • **Alert Thresholds**: Set the time or value for when the product sends particular alerts. • **AutoSend**: Configure the product to send automated e-mails regarding product configuration and supplies to specific e-mail addresses. • **Security**: Set a password that must be entered to gain access to the **Settings** and **Networking** tabs as well as portions of the product's control panel and HP Jetdirect networking. Enable and disable certain features of the product. • **Edit Other Links**: Add or customize a link to another Web site. This link is displayed in the **Other Links** area on all embedded Web server pages. • **Device Information**: Name the product and assign an asset number to it. Enter the name and e-mail address for the primary contact who will receive information about the product. • **Language**: Determine the language in which to display the embedded Web server information. • **Date & Time**: Synchronize the time with a network time server. • **Sleep Schedule**: Set or edit a wake time for the product to become ready. **NOTE:** The **Settings** tab can be password-protected. If this product is on a network, always consult with the system administrator before changing settings on this tab.
Networking tab Provides the ability to change network settings from your computer	Network administrators can use this tab to control network-related settings for the product when it is connected to an IP-based network. This tab does not appear if the product is directly connected to a computer, or if the product is connected to a network using anything other than an HP Jetdirect print server. **NOTE:** The **Networking** tab can be password-protected.
Other Links Contains links that connect you to the Internet	• **hp instant support**: Connects you to the HP Web site to help you find solutions to product problems. • **Shop for Supplies**: Connects to the HP SureSupply Web site, where you will receive information on options for purchasing original HP supplies, such as print cartridges and paper. • **Product Support**: Connects to the support site for the product, from which you can find help regarding various topics. • **Show Me How**: Connects to information that demonstrates specific tasks for the product, such as clearing jams and printing on various types of paper. **NOTE:** You must have Internet access in order to use any of these links. If you use a dial-up connection and did not connect when you first opened the embedded Web server, you must connect before you can visit these Web sites. Connecting might require that you close the embedded Web server and reopen it.

Downloaded from www.Manualslib.com manuals search engine

Use HP Web Jetadmin software

HP Web Jetadmin is a Web-based software solution for remotely installing, monitoring, and troubleshooting network-connected peripherals. Management is proactive, allowing network administrators the ability to resolve issues before users are affected. Download this free, enhanced-management software at www.hp.com/go/webjetadmin.

Device plug-ins can be installed into HP Web Jetadmin to provide support for specific product features. The HP Web Jetadmin software can automatically notify you when new plug-ins are available. On the **Product Update** page, follow the directions to automatically connect to the HP Web site and install the latest device plug-ins for your product.

NOTE: Browsers must be Java™-enabled. Browsing from an Apple PC is not supported.

Downloaded from www.Manualslib.com manuals search engine

Use security features

The product supports security standards and recommended protocols that help you keep the product secure, protect critical information on your network, and simplify the way you monitor and maintain the product.

For in-depth information about HP's secure imaging and printing solutions, visit www.hp.com/go/secureprinting. The site provides links to white papers and FAQ documents about security features.

IP Security

IP Security (IPsec) is a set of protocols that control IP-based network traffic to and from the product. IPsec provides host-to-host authentication, data integrity, and encryption of network communications.

For products that are connected to the network and have an HP Jetdirect print server, you can configure IPsec by using the **Networking** tab in the embedded Web server.

Secure the embedded Web server

1. Open the embedded Web server. See Use the embedded Web server on page 113.
2. Click the **Settings** tab.
3. Click the **Security** link.
4. Click the **Device Security Settings** button.
5. Type the password in the **New Password** box, and type it again in the **Verify password** box.
6. Click the **Apply** button. Make note of the password and store it in a safe place.

Secure Disk Erase

To protect deleted data from unauthorized access on the product hard drive, use the Secure Disk Erase feature in the HP Web Jetadmin software. This feature can securely erase print jobs from the hard drive.

Secure Disk Erase offers the following levels of disk security:

- **Non-Secure Fast Erase**. This is a simple file-table erase function. Access to the file is removed, but actual data is retained on the disk until it is overwritten by subsequent data-storage operations. This is the fastest mode. Non-Secure Fast Erase is the default erase mode.
- **Secure Fast Erase**. Access to the file is removed, and the data is overwritten with a fixed identical character pattern. This is slower than Non-Secure Fast Erase, but all data is overwritten. Secure Fast Erase meets the U.S. Department of Defense 5220-22.M requirements for the clearing of disk media.
- **Secure Sanitizing Erase**. This level is similar to the Secure Fast Erase mode. In addition, data is repetitively overwritten by using an algorithm that prevents any residual data persistence. This mode will impact performance. Secure Sanitizing Erase meets the U.S. Department of Defense 5220-22.M requirements for the sanitization of disk media.

Downloaded from www.Manualslib.com manuals search engine

Data affected

Data affected by the Secure Disk Erase feature includes temporary files that are created during the print process, stored jobs, proof and hold jobs, disk-based fonts, disk-based macros (forms), address books, and HP and third-party applications.

NOTE: Stored jobs will be securely overwritten only when they have been deleted through the **RETRIEVE JOB** menu on the product after the appropriate erase mode has been set.

This feature will not impact data that is stored on flash-based product non-volatile RAM (NVRAM) that is used to store default settings, page counts, and similar data. This feature does not affect data that is stored on a system RAM disk (if one is used). This feature does not impact data that is stored on the flash-based system boot RAM.

Changing the Secure Disk Erase mode does not overwrite previous data on the disk, nor does it immediately perform a full-disk sanitization. Changing the Secure Disk Erase mode changes how the product cleans up temporary data for jobs after the erase mode has been changed.

Additional Information

For additional information about the HP Secure Disk Erase feature, see the HP support flyer or go to www.hp.com/go/webjetadmin.

HP Encrypted High Performance hard disks

This product supports an optional encrypted hard disk that you can install in the EIO accessory slot. This hard disk provides hardware-based encryption so you can securely store sensitive data without impacting product performance. This hard disk uses the latest Advanced Encryption Standard (AES) and has versatile time-saving features and robust functionality.

For information about ordering these accessories, see Part numbers on page 201.

Hardware integration pocket

The product has a hardware integration pocket in which you can install a third-party security device. The pocket is on top of the product, behind the control panel. You can connect the third-party device to the product by using one of the internal USB ports.

NOTE: The hardware integration pocket is not included with the base model.

Secure stored jobs

You can protect jobs that are stored on the product by assigning a PIN to them. Anyone who tries to print these protected jobs must first enter the PIN at the product control panel.

For more information, see Use job-storage features on page 96.

Downloaded from www.Manualslib.com manuals search engine

Lock the control panel menus

You can lock various menus on the control panel by using the embedded Web server.

1. Open the embedded Web server by entering the product IP address into the address line of a Web browser.
2. Click the **Settings** tab, and then click the **Security** link.
3. Click the **Device Security Settings** button.
4. In the **Control Panel Access Lock** area, select the level of security that you want.

Security level	Locked menus
Minimum Menu Lock	• The **RETRIEVE JOB** menu requires a PIN for access. • The **SYSTEM SETUP** menu is locked. • The **I/O** menu is locked. • The **RESETS** menu is locked.
Moderate Menu Lock	• The **RETRIEVE JOB** menu requires a PIN for access. • The **CONFIGURE DEVICE** menu is locked (all submenus). • The **DIAGNOSTICS** menu is locked.
Intermediate Menu Lock	• The **RETRIEVE JOB** menu requires a PIN for access. • The **PAPER HANDLING** menu is locked. • The **CONFIGURE DEVICE** menu is locked (all submenus). • The **DIAGNOSTICS** menu is locked.
Maximum Menu Lock	• The **RETRIEVE JOB** menu requires a PIN for access. • The **INFORMATION** menu is locked. • The **PAPER HANDLING** menu is locked. • The **CONFIGURE DEVICE** menu is locked (all submenus). • The **DIAGNOSTICS** menu is locked.

5. Click the **Apply** button.

Downloaded from www.Manualslib.com manuals search engine

Lock the formatter

The formatter area, on the back of the product, has a slot that you can use to attach a security cable. Locking the formatter prevents someone from removing valuable components from it.

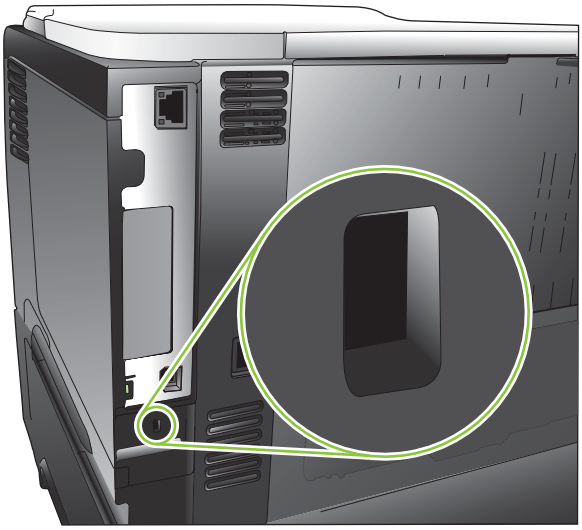

Downloaded from www.Manualslib.com manuals search engine

Manage supplies

Use genuine HP print cartridges for the best printing results.

Print-cartridge storage

Do not remove the print cartridge from its package until you are ready to use it.

△ **CAUTION:** To prevent damage to the print cartridge, do not expose it to light for more than a few minutes.

HP policy on non-HP print cartridges

Hewlett-Packard Company cannot recommend the use of non-HP print cartridges, either new or remanufactured.

NOTE: Any damage caused by a non-HP print cartridge is not covered under the HP warranty and service agreements.

To install a new HP print cartridge, see Change the print cartridge on page 122. To recycle the used cartridge, follow the instructions included with the new cartridge. For more information about recycling, see Return and recycling instructions on page 218.

HP fraud hotline and Web site

Call the HP fraud hotline (1-877-219-3183, toll-free in North America) or go to www.hp.com/go/anticounterfeit when you install an HP print cartridge and the control-panel message says the cartridge is non-HP. HP will help determine if the cartridge is genuine and take steps to resolve the problem.

Your print cartridge might not be a genuine HP print cartridge if you notice the following:

- You are experiencing a high number of problems with the print cartridge.
- The cartridge does not look like it usually does (for example, the orange pull tab is missing, or the packaging differs from HP packaging).

Supplies life

For information regarding specific product yield, see www.hp.com/go/learnaboutsupplies.

To order supplies, see Supplies and accessories on page 199.

Downloaded from www.Manualslib.com manuals search engine

Replace supplies and parts

Supply replacement guidelines

Keep the following guidelines in mind when setting up the product.

- Provide enough space above and in the front of the product for removing supplies.
- Place the product on a flat, sturdy surface.

Change the print cartridge

When a print cartridge reaches the end of its estimated useful life, the control panel displays a **BLACK CARTRIDGE VERY LOW** message. You do not need to replace the supply at this time unless print quality is no longer acceptable. When the supply has reached this condition, the HP premium protection warranty for that supply has ended.

The cartridge-life remaining is an approximation only, and it varies depending on the types of documents you print and other factors.

You can configure the product to stop when the **BLACK CARTRIDGE VERY LOW** message displays. The print cartridge might still be able to produce acceptable print quality. To continue printing, either replace the supply or use the **MANAGE SUPPLIES** menu to reconfigure the product to continue printing. For more information, see Manage supplies menu on page 20.

CAUTION: If toner gets on clothing, wipe it off with a dry cloth and wash the clothes in cold water. Hot water sets toner into fabric.

NOTE: Information about recycling used print cartridges is on the print-cartridge box. See Return and recycling instructions on page 218.

TIP: To see an animation of this procedure go to this Web site: www.hp.com/go/ljp3010-replace-print-cartridges.

1. Press the top-cover release button, and open the top cover.

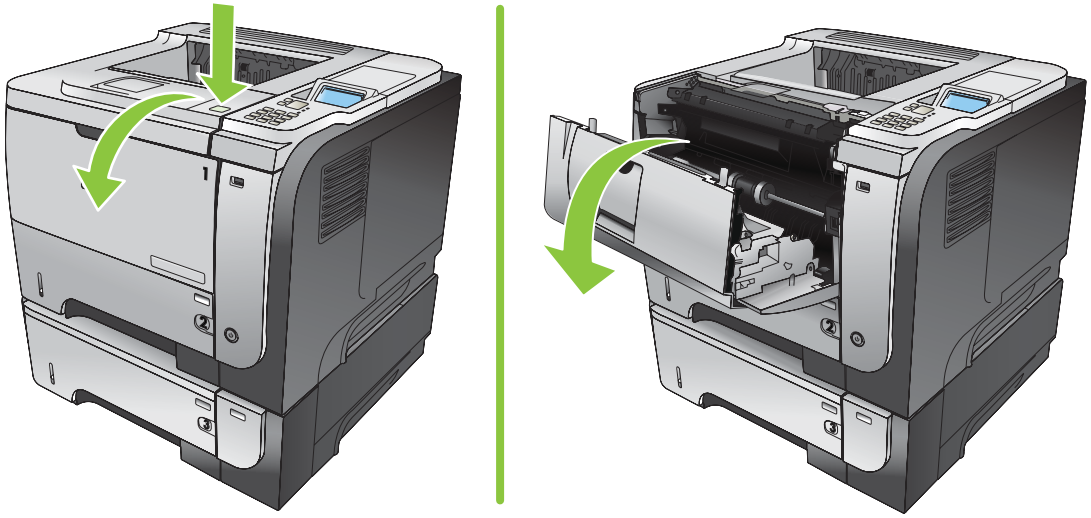

Downloaded from www.Manualslib.com manuals search engine

2. Remove the used print cartridge from the product.

3. Remove the new print cartridge from the bag. Place the used print cartridge in the bag for recycling.

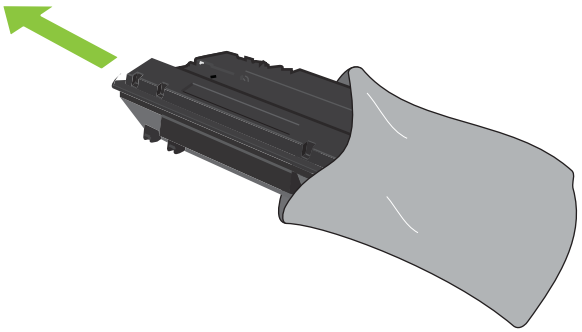

4. Grasp the front and back of the print cartridge, and distribute the toner by gently rocking the print cartridge five or six times.

△ **CAUTION:** Do not touch the shutter or the surface of the roller.

Downloaded from www.Manualslib.com manuals search engine

5. Remove the shipping tape from the new print cartridge. Discard the tape according to local regulations.

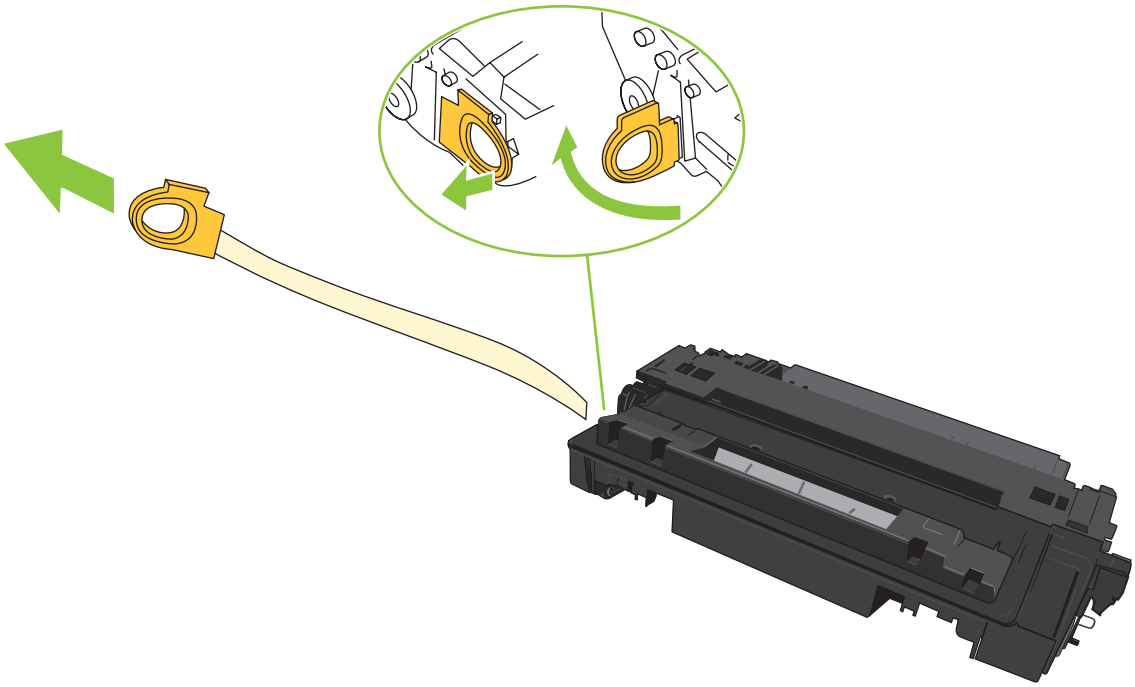

6. Align the print cartridge with the tracks inside the product, and insert the print cartridge until it is firmly seated.

Downloaded from www.Manualslib.com manuals search engine

7. Close the top cover. After a short time, the control panel should display **Ready**.

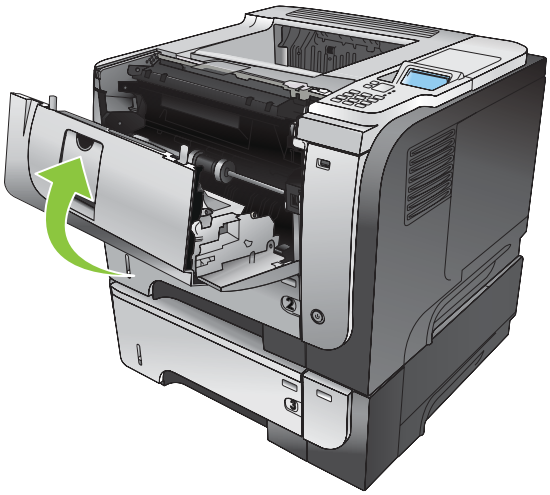

Downloaded from www.Manualslib.com manuals search engine

Install memory, internal USB devices, and external I/O cards

Overview

The formatter has the following open slots and ports for expanding the product's capabilities:

- One dual inline memory module (DIMM) slot for upgrading the product with more memory
- Two internal USB ports for adding fonts, languages, and other third-party solutions
- One external I/O (EIO) slot for adding an external print server, an external hard disk, or a parallel port

  If the product already has an embedded HP Jetdirect print server installed, you can add an additional networking device in the EIO slot.

For information about ordering specific components, see Supplies and accessories on page 199.

To find out how much memory is installed in the product or to find out what is installed in the USB ports or the EIO slot, print a configuration page.

Install memory

You might want to add more memory to the product if you often print complex graphics, print PostScript (PS) documents, or use many downloaded fonts. Added memory also gives you more flexibility in supporting job-storage features, such as quick copying.

This product supports printing PDF files when 96 MB of memory is installed. However, for the best performance, upgrade the memory to at least 192 MB.

NOTE: Single inline memory modules (SIMMs) used in previous HP LaserJet products are not compatible with the product.

Install product memory

This product has one DIMM slot.

CAUTION: Static electricity can damage electronic parts. When installing DIMMs, either wear an antistatic wrist strap or frequently touch the surface of the DIMM antistatic package, and then touch bare metal on the product.

1. If you have not already done so, print a configuration page to find out how much memory is installed in the product. See Print the information and show-me-how pages on page 108.

Downloaded from www.Manualslib.com manuals search engine

2. Turn the product off and disconnect the power cord.

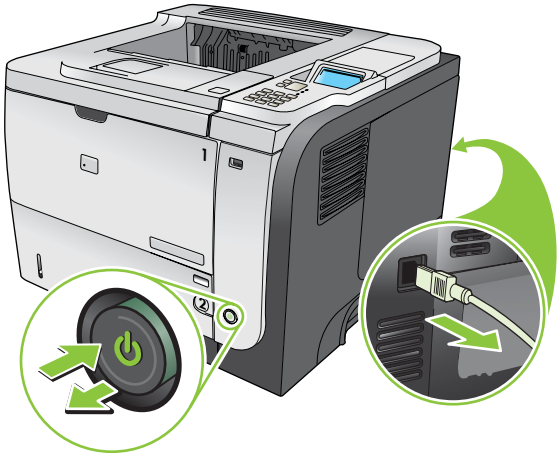

3. Disconnect all interface cables.

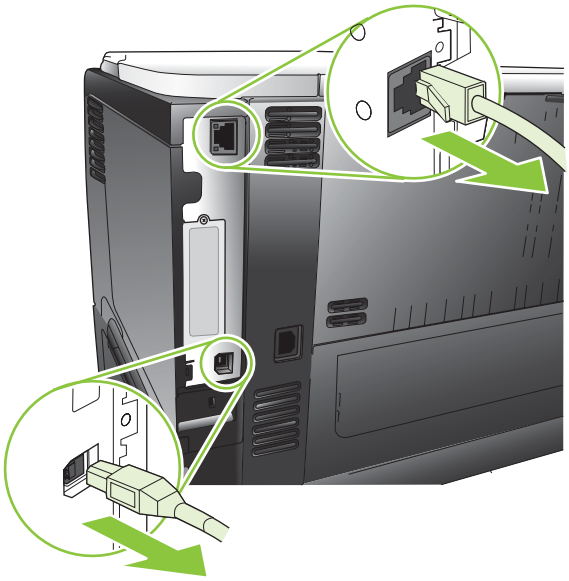

4. Remove the right-side panel by sliding it towards the rear of the product to unlatch it.

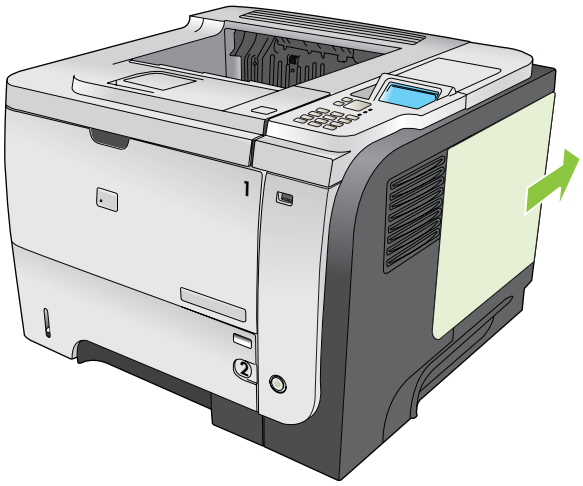

Downloaded from www.Manualslib.com manuals search engine

5. Remove the DIMM from the antistatic package.

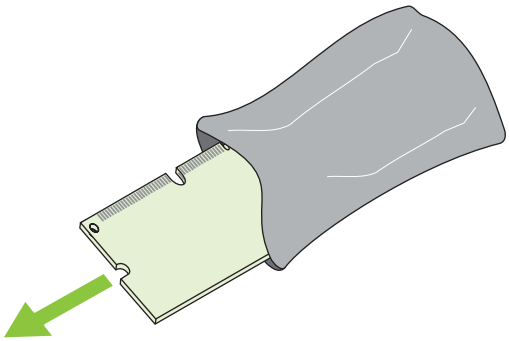

△ **CAUTION:** To reduce the possibility of damage caused by static electricity, always wear an electrostatic discharge (ESD) wrist strap or touch the surface of the antistatic package before handling DIMMs.

6. Holding the DIMM by the edges, align the notch on the DIMM with the bar in the DIMM slot at an angle and firmly press the DIMM into the slot until it is fully seated. When installed correctly, the metal contacts are not visible.

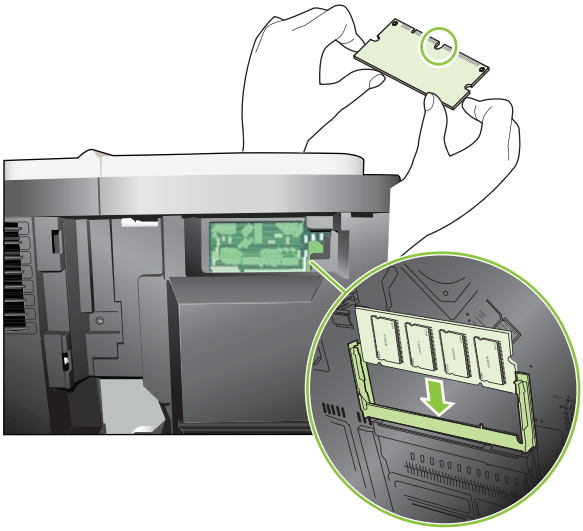

Downloaded from www.Manualslib.com manuals search engine

7. Push down on the DIMM until both latches engage the DIMM.

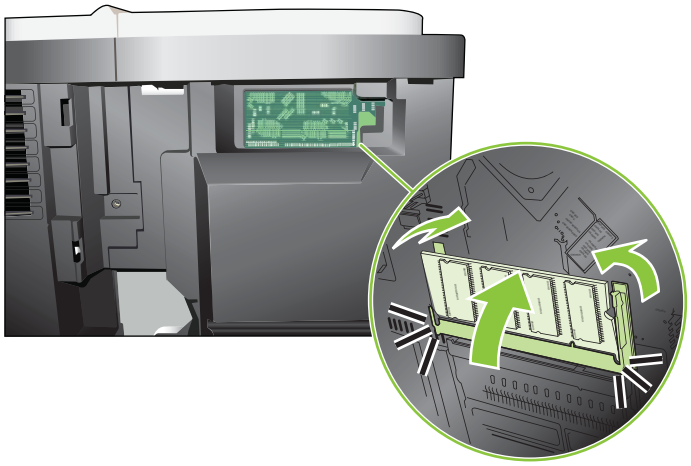

NOTE: If you have difficulty inserting the DIMM, make sure the notch on the bottom of the DIMM is aligned with the bar in the slot. If the DIMM still does not go in, make sure you are using the correct type of DIMM.

8. Reinstall the right-side panel. Align the tabs on the panel with the slots in the product, and push the panel toward the front of the product until it latches into place.

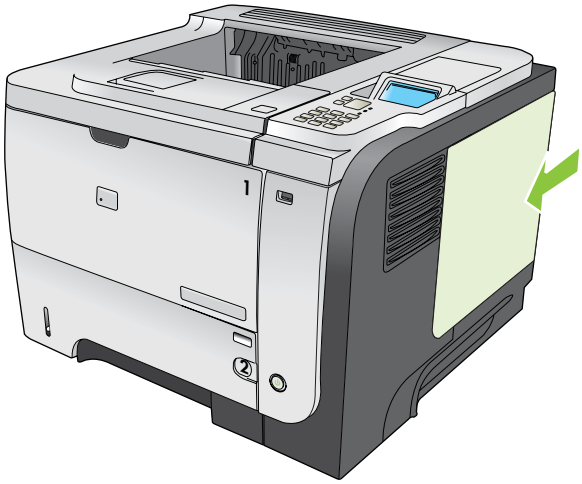

Downloaded from www.Manualslib.com manuals search engine

9. Reconnect the interface cables and the power cord.

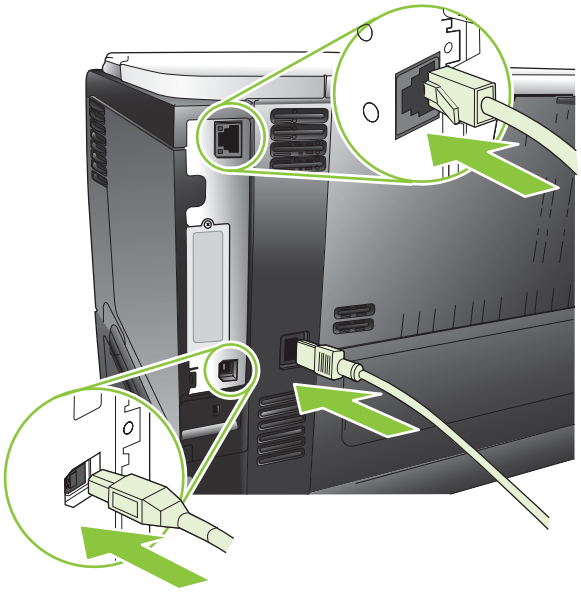

10. Turn the product on.

Check DIMM installation

After installing the DIMM, make sure that the installation was successful.

1. Turn the product on. Check that the Ready light is illuminated after the product has gone through the startup sequence. If an error message appears, a DIMM might have been incorrectly installed. See Interpret control-panel messages on page 147.

2. Print a configuration page (see Print the information and show-me-how pages on page 108).

3. Check the memory section on the configuration page and compare it to the configuration page that was printed before the memory installation. If the amount of memory has not increased, the DIMM might not be installed correctly, or the DIMM might be defective. Repeat the installation procedure. If necessary, install a different DIMM.

NOTE: If you installed a product language (personality), check the "Installed Personalities and Options" section on the configuration page. This area should list the new product language.

Save resources (permanent resources)

Utilities or jobs that you download to the product sometimes include resources (for example, fonts, macros, or patterns). Resources that are internally marked as permanent remain in the product memory until you turn the product off.

Use the following guidelines if you use the page description language (PDL) ability to mark resources as permanent. For technical details, see an appropriate PDL reference for PCL or PS.

- Mark resources as permanent only when it is absolutely necessary that they remain in memory while the product is turned on.

- Send permanent resources to the product only at the beginning of a print job and not while the product is printing.

Downloaded from www.Manualslib.com manuals search engine

NOTE: Overusing permanent resources or downloading them while the product is printing might affect product performance or the ability to print complex pages.

Enable memory for Windows

1. **Windows XP and Windows Server 2003 (using the default Start menu view)**: Click **Start**, click **Settings**, and then click **Printers and Faxes**.

   -or-

   Windows 2000, Windows XP, and Windows Server 2003 (using the Classic Start menu view): Click **Start**, click **Settings**, and then click **Printers**.

   -or-

   Windows Vista: Click **Start**, click **Control Panel**, and then in the category for **Hardware and Sound** click **Printer**.

2. Right-click the driver icon, and then select **Properties**.
3. Click the **Device Settings** tab.
4. Expand the area for **Installable Options**.
5. Next to **Printer Memory**, select the total amount of memory that is installed.
6. Click **OK**.

Downloaded from www.Manualslib.com manuals search engine

Install internal USB devices

The product has two internal USB ports.

1. Turn the product off and disconnect the power cord.

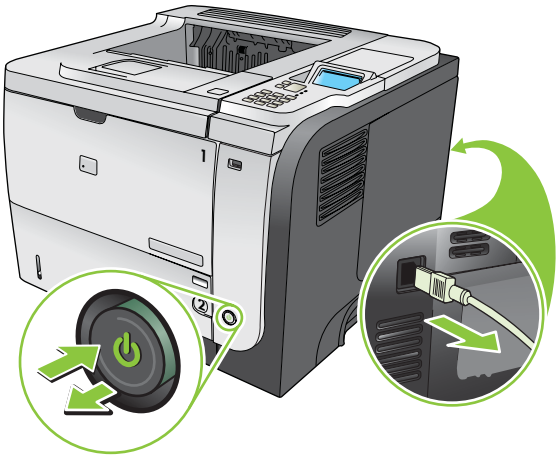

2. Disconnect all interface cables.

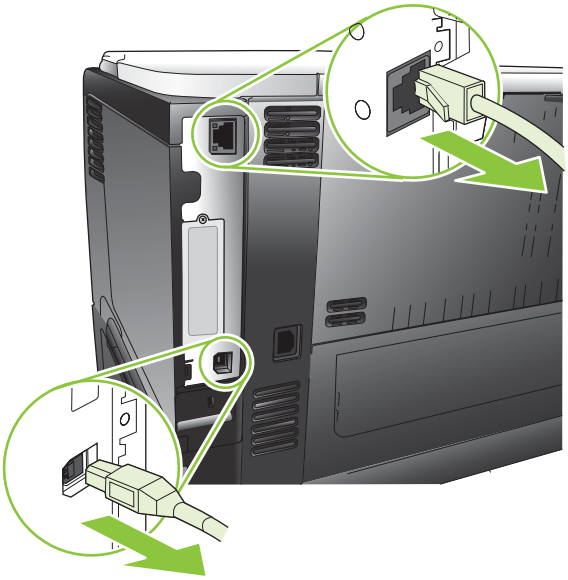

Downloaded from www.Manualslib.com manuals search engine

3. Remove the right-side panel by sliding it towards the rear of the product to unlatch it.

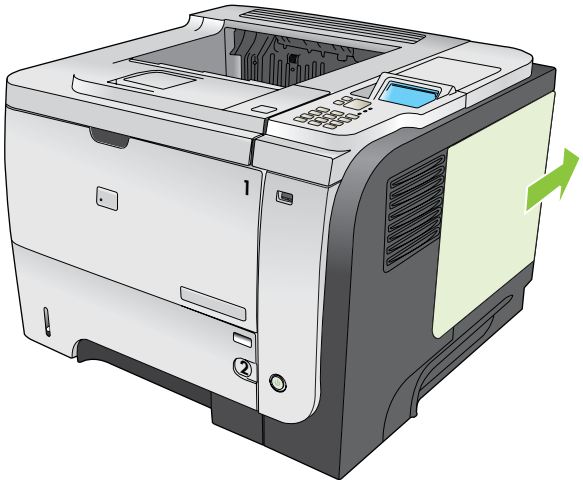

4. Locate the USB ports near the bottom of the formatter board. Insert the USB device into one of the ports.

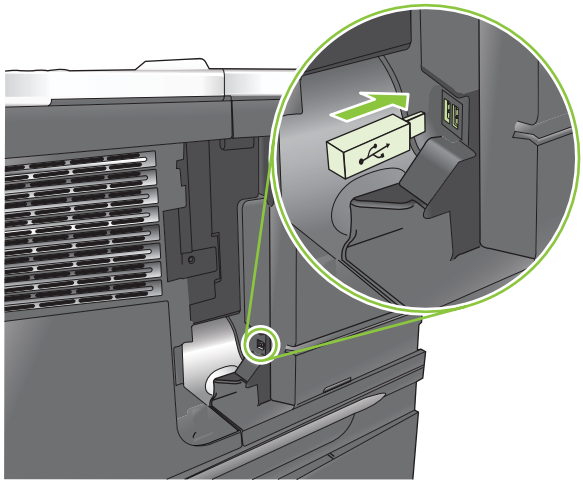

Downloaded from www.Manualslib.com manuals search engine

5. Reinstall the right-side panel. Align the tabs on the panel with the slots in the product, and push the panel toward the front of the product until it latches into place.

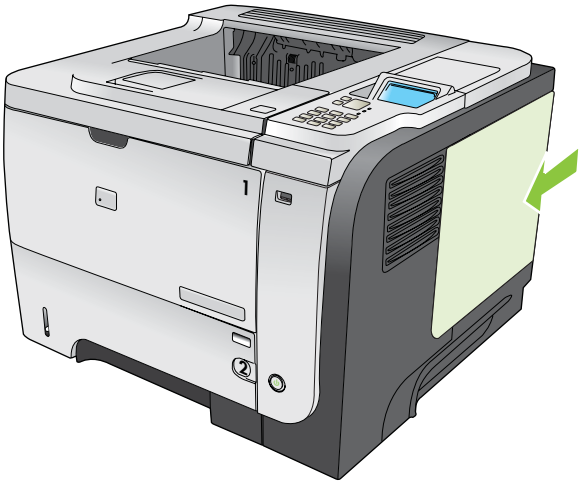

6. Reconnect the interface cables and the power cord.

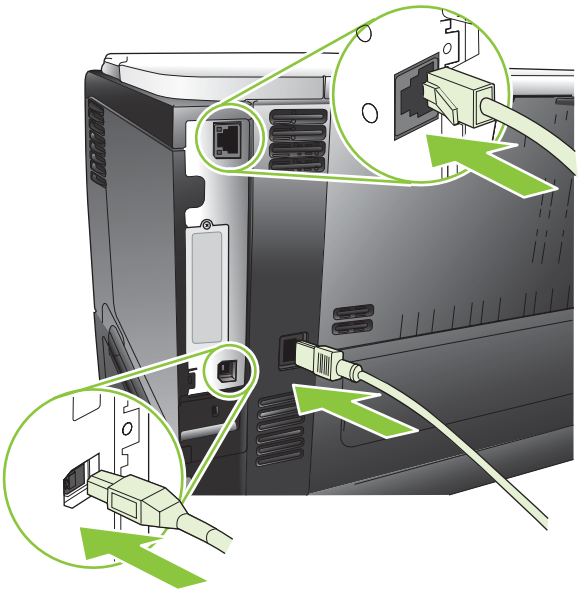

7. Turn the product on.

Downloaded from www.Manualslib.com manuals search engine

Install EIO cards

Install an EIO card

1. Turn off the product.
2. Remove the two screws and cover plate from the EIO slot on the back of the product.

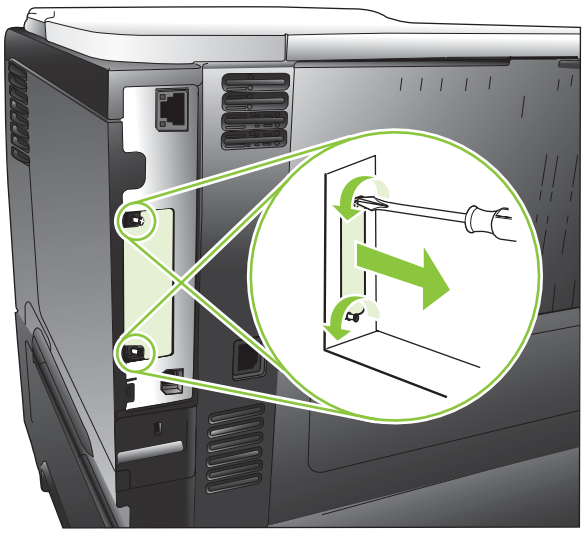

3. Install the EIO card in the EIO slot and tighten the screws.

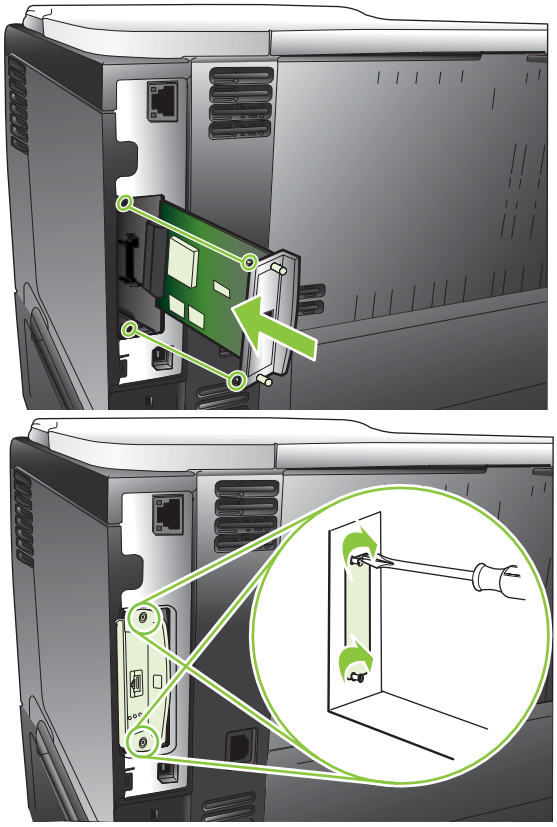

Downloaded from www.Manualslib.com manuals search engine

4. If the EIO card requires a cable connection, connect the cable.

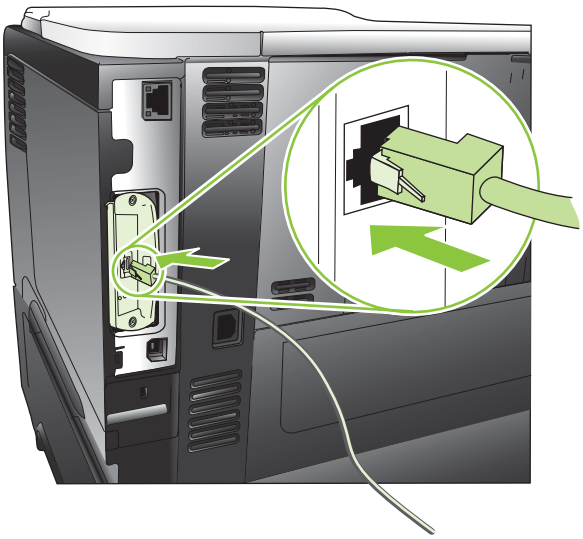

5. Turn on the product, and then print a configuration page to verify that the new EIO card is recognized. See Print the information and show-me-how pages on page 108.

NOTE: When you print a configuration page, an HP Jetdirect configuration page that contains network configuration and status information also prints.

Remove an EIO card

1. Turn off the product.
2. Disconnect any cables from the EIO card.
3. Loosen the two screws from the EIO card, and then remove the EIO card from the EIO slot.
4. Place the cover plate from the EIO slot onto the back of the product. Insert and tighten the two screws.
5. Turn on the product.

Downloaded from www.Manualslib.com manuals search engine

Clean the product

During the printing process, paper, toner, and dust particles can accumulate inside the product. Over time, this buildup can cause print-quality problems, such as toner specks or smearing (see Solve print-quality problems on page 182).

Clean the exterior

Use a soft, damp, lint-free cloth to wipe dust, smudges, and stains off of the exterior of the device.

Clean the paper path

Create and use the cleaning page

1. Press the Menu button .
2. Press the up arrow or down arrow ▲/▼ to highlight the **CONFIGURE DEVICE** menu, and then press the OK button.
3. Press the up arrow or down arrow ▲/▼ to highlight the **PRINT QUALITY** menu, and then press the OK button.
4. If the product does not have automatic two-sided printing, press the up arrow or down arrow ▲/▼ to highlight the **CREATE CLEANING PAGE** option, and then press the OK button. If the product has automatic two-sided printing, go to step 5.
5. Press the up arrow or down arrow ▲/▼ to highlight the **PROCESS CLEANING PAGE** option, and then press the OK button. The cleaning process takes several minutes.
6. Discard the printed page. The task is complete.

Downloaded from www.Manualslib.com manuals search engine

Upgrade the firmware

This product has remote firmware update (RFU) capability. Use this information to upgrade the product firmware.

Determine the current firmware version

1. Press the Menu button .
2. Press the down arrow ▼ to highlight the **INFORMATION** menu, and then press the OK button.
3. Press the down arrow ▼ to highlight the **PRINT CONFIGURATION** option, and then press the OK button to print.

The firmware datecode is listed on the configuration page in the section called **Device Information**. The firmware datecode has this format: YYYYMMDD XX.XXX.X.

- The first string of numbers is the date, where YYYY represents the year, MM represents the month, and DD represents the date.
- The second string of numbers is the firmware version number, in decimal format.

Download new firmware from the HP Web site

To download the most recent firmware upgrade for the product, go to www.hp.com/go/ljp3010series_firmware.

Transfer the new firmware to the product

NOTE: The product can receive an .RFU file update when it is in a **Ready** state.

The following conditions can affect the time required to transfer the file.

- The speed of the host computer that is sending the update.
- Any jobs that are ahead of the .RFU job in the queue are completed before the update is processed.
- If the process is interrupted before the firmware is downloaded, you must send the firmware file again.
- If power is lost during the firmware update, the update is interrupted and the message **Resend upgrade** appears (in English only) on the control-panel display. In this case, you must send the upgrade by using the USB port.

NOTE: The firmware update involves a change in the format of nonvolatile random-access memory (NVRAM). Any menu settings that are changed from the default settings might return to default settings and must be changed again if you want settings that are different from the defaults.

Use the flash executable file to update the firmware

This product has flash-based memory, so you can use the flash firmware executable (.EXE) file to upgrade the firmware. Download this file from www.hp.com/go/ljp3010series_firmware.

Downloaded from www.Manualslib.com manuals search engine

NOTE: To use this method, connect the product directly to your computer through a USB cable, and install the printer driver for this product on your computer.

1. Print a configuration page and note the TCP/IP address.
2. Find the .EXE file on your computer, and double-click it to open the file.
3. From the **Select Printer to Update** drop-down list, select this product. Click the **Start** button to begin the update process.

   CAUTION: Do not turn the product off or try to send a print job during this process.

4. When the process is complete, a smiling face icon displays in the dialog box. Click the **Exit** button.
5. Turn the product off and then on.
6. Print another configuration page and verify that the new firmware datecode is listed.

Use FTP to upload the firmware through a browser

1. Make sure the Internet browser you are using is configured for viewing folders from FTP sites. These instructions are for Microsoft Internet Explorer.
   a. Open the browser and click **Tools**, and then click **Internet Options**.
   b. Click the **Advanced** tab.
   c. Select the box labeled **Enable folder view for FTP sites**.
   d. Click **OK**.
2. Print a configuration page and note the TCP/IP address.
3. Open a browser window.
4. In the address line of the browser, type `ftp://<ADDRESS>`, where <ADDRESS> is the address of the product. For example, if the TCP/IP address is 192.168.0.90, type `ftp://192.168.0.90`.
5. Locate the downloaded .RFU file for the product.
6. Drag and drop the .RFU file onto the **PORT** icon in the browser window.

NOTE: The product turns off and then on automatically to activate the update. When the update process is complete, a **Ready** message displays on the product control panel.

Use FTP to upgrade the firmware on a network connection

1. Take note of the IP address on the HP Jetdirect page. The HP Jetdirect page is the second page that prints when you print the configuration page.

   NOTE: Before upgrading the firmware, make sure that any error messages are cleared from the control-panel display.

2. Click **Start**, click **Run**, and then type `cmd` to open the command window.
3. Type `ftp <TCP/IP ADDRESS>`. For example, if the TCP/IP address is 192.168.0.90, type `ftp 192.168.0.90`.

Downloaded from www.Manualslib.com manuals search engine

4. Go to the folder where the firmware file is stored.
5. Press Enter on the keyboard.
6. When prompted for the user name, press Enter.
7. When prompted for the password, press Enter.
8. Type `bin` at the command prompt.
9. Press Enter. The message **200 Types set to I, Using binary mode to transfer files** appears in the command window.
10. Type `put` and then the file name. For example, if the file name is ljp3015.rfu, type `put ljp3015.rfu`.
11. The download process begins and the firmware is updated on the product. This can take several minutes. Let the process finish without further interaction with the product or computer.

    NOTE: The product automatically turns off and then on again after processing the upgrade.

12. At the command prompt, type `bye` to exit the ftp command.
13. At the command prompt, type `exit` to return to the Windows interface.

Use HP Web Jetadmin to upgrade the firmware

To learn how to use HP Web Jetadmin to upgrade the product firmware, go to www.hp.com/go/webjetadmin.

Use Microsoft Windows commands to upgrade the firmware

NOTE: This process requires the product to be shared on a network.

1. Click **Start**, click **Run**, and then type `cmd` to open the command window.
2. Type the following: `copy /B <FILENAME> \\<COMPUTERNAME>\<SHARENAME>`, where <FILENAME> is the name of the .RFU file (including the path), <COMPUTERNAME> is the name of the computer from which the product is being shared, and <SHARENAME> is the product share name. For example: `C:\>copy /b C:\ljp3015.rfu \\YOUR_SERVER\YOUR_COMPUTER`.

   NOTE: If the file name or path includes a space, you must enclose the file name or path in quotation marks. For example, type: `C:\>copy /b "C:\MY DOCUMENTS\ljp3015.rfu" \\YOUR_SERVER\YOUR_COMPUTER`.

3. Press Enter on the keyboard. The control panel shows a message that indicates the progress of the firmware upgrade. At the end of the upgrade process, the control panel shows the **Ready** message. The message **One File Copied** appears on the computer screen.

Upgrade the HP Jetdirect firmware

The HP Jetdirect network interface in the product has firmware that can be upgraded separately from the product firmware. This procedure requires that you install HP Web Jetadmin Version 7.0 or later on

Downloaded from www.Manualslib.com manuals search engine

your computer. See Use HP Web Jetadmin software on page 116. Complete the following steps to update the HP Jetdirect firmware by using HP Web Jetadmin.

1. Open the HP Web Jetadmin program.
2. Open the **Device Management** folder in the drop-down list in the **Navigation** panel. Navigate to the **Device Lists** folder.
3. Select the product that you want to update.
4. In the **Device Tools** drop-down list, select the **Jetdirect Firmware Update** option.
5. Under the **Jetdirect Firmware Version** heading the HP Jetdirect model number and current firmware version are listed. Make a note of these.
6. Go to http://www.hp.com/go/wja_firmware.
7. Scroll down to the list of HP Jetdirect model numbers, and find the model number you wrote down.
8. Look at the current firmware version for the model, and see if it is later than the version you wrote down. If it is, right-click on the firmware link, and follow the instructions on the Web page to download the new firmware file. The file must be saved into the <drive>:\PROGRAM FILES \HP WEB JETADMIN\DOC\PLUGINS\HPWJA\FIRMWARE\JETDIRECT folder on the computer that is running the HP Web Jetadmin software.
9. In HP Web Jetadmin, return to the main product list and select the digital sender again.
10. In the **Device Tools** drop-down list, select the **Jetdirect Firmware Update** option again.
11. On the HP Jetdirect firmware page, the new firmware version is listed under the **Jetdirect Firmware Available on HP Web Jetadmin** heading. Click the **Update Firmware Now** button to update the Jetdirect firmware.

NOTE: You can also use FTP or the embedded Web Server to update the HP Jetdirect firmware. For more information, go to http://www.hp.com/go/wja_firmware.

Downloaded from www.Manualslib.com manuals search engine

Downloaded from www.Manualslib.com manuals search engine

10 Solve problems

- Solve general problems
- Restore factory settings
- Interpret control-panel messages
- Jams
- Paper-handling problems
- Solve print-quality problems
- Solve performance problems
- Solve connectivity problems
- Solve walk-up USB printing problems
- Product software problems
- Solve common Windows problems
- Solve common Macintosh problems

Downloaded from www.Manualslib.com manuals search engine

Solve general problems

If the product is not responding correctly, complete the steps in the following checklist, in order. If the product does not pass a step, follow the corresponding troubleshooting suggestions. If a step resolves the problem, you can stop without performing the other steps on the checklist.

Troubleshooting checklist

1. Make sure the product Ready light is on. If no lights are on, complete these steps:
   a. Check the power-cable connections.
   b. Check that the power is turned on.
   c. Make sure that the line voltage is correct for the product power configuration. (See the label that is on the back of the product for voltage requirements.) If you are using a power strip and its voltage is not within specifications, plug the product directly into the wall. If it is already plugged into the wall, try a different outlet.
   d. If none of these measures restores power, contact HP Customer Care.
2. Check the cabling.
   a. Check the cable connection between the product and the computer or network port. Make sure that the connection is secure.
   b. Make sure that the cable itself is not faulty by using a different cable, if possible.
   c. Check the network connection. See Solve network problems on page 190.
3. Check to see if any messages appear on the control-panel display. If any error messages appear, see Interpret control-panel messages on page 147.
4. Ensure that the paper that you are using meets specifications.
5. Print a configuration page. See Print the information and show-me-how pages on page 108. If the product is connected to a network, an HP Jetdirect page also prints.
   a. If the pages do not print, check that at least one tray contains paper.
   b. If the page jams in the product, see Clear jams on page 163.
6. If the configuration page prints, check the following items.
   a. If the page does not print correctly, the problem is with the product hardware. Contact HP Customer Care.
   b. If the page prints correctly, then the product hardware is working. The problem is with the computer you are using, with the printer driver, or with the program.
7. Select one of the following options:

   Windows: Click **Start**, click **Settings**, and then click **Printers**, or **Printers and Faxes**. Double-click the name of the product.

   -or-

   Mac OS X: Open **Print Center** or **Printer Setup Utility**, and double-click the line for the product.

Downloaded from www.Manualslib.com manuals search engine

8. Verify that you have installed the printer driver for this product. Check the program to make sure that you are using the printer driver for this product.

9. Print a short document from a different program that has worked in the past. If this solution works, then the problem is with the program you are using. If this solution does not work (the document does not print) complete these steps:

   a. Try printing the job from another computer that has the product software installed.

   b. If you connected the product to the network, connect the product directly to a computer with a USB cable. Redirect the product to the correct port, or reinstall the software, selecting the new connection type that you are using.

Factors that affect product performance

Several factors affect the time it takes to print a job:

- Maximum product speed, measured in pages per minute (ppm)
- The use of special paper (such as transparencies, heavy paper, and custom-size paper)
- Product processing and download time
- The complexity and size of graphics
- The speed of the computer you are using
- The USB connection
- The printer I/O configuration
- The amount of memory installed in the product
- The network operating system and configuration (if applicable)
- The printer driver that you are using.

NOTE: Although additional memory can improve how the product handles complex graphics and improve download times, it will not increase maximum product speed (ppm).

Downloaded from www.Manualslib.com manuals search engine

Restore factory settings

1. Press the Menu button .
2. Open each of the following menus. Press the down arrow ▼ to highlight it and then press the OK button to select it.
   a. **CONFIGURE DEVICE**
   b. **RESETS**
   c. **RESTORE FACTORY SETTINGS**

For more information, see Resets menu on page 36.

Downloaded from www.Manualslib.com manuals search engine

Interpret control-panel messages

Control-panel message types

Four types of control-panel messages can indicate the status of or problems with the product.

Message type	Description
Status messages	Status messages reflect the current state of the product. They inform you of normal product operation and require no interaction to clear them. They change as the state of the product changes. Whenever the product is ready, not busy, and has no pending warning messages, the product displays the **Ready** status message.
Warning messages	Warning messages inform you of data and print errors. These messages typically alternate with the **Ready** message or other status messages and remain until you press the OK button. Some warning messages are clearable. If you set the **CLEARABLE WARNINGS** setting to the **JOB** option in the **CONFIGURE DEVICE** menu, the next print job clears these messages.
Error messages	Error messages communicate that you must perform some action, such as adding paper or clearing a jam. Some error messages are autocontinuable. If the **AUTO CONTINUE** setting is turned on in the **CONFIGURE DEVICE** menu, the product continues normal operation after an autocontinuable error message displays for 10 seconds. **NOTE:** Pressing any button during the 10-second autocontinuable error message overrides the auto-continue feature, and the button function takes precedence. For example, pressing the stop button ⊗ pauses printing and offers the option to cancel the print job.
Critical-error messages	Critical error messages inform you of a product failure. You can clear some of these messages by turning the product off and then on. These messages are not affected by the **AUTO CONTINUE** setting. If a critical error persists, service is required.

Control-panel messages

Table 10-1 Control-panel messages

Control panel message	Description	Recommended action
10.XX.YY SUPPLY MEMORY ERROR **For help press ?**	An error has occurred in one or more of the product's supplies. 10.00.0Y = memory is defective 10.10.0Y = memory is missing	1. Turn the product off and then on to clear the message. 2. If the message persists, contact an HP-authorized service or support provider.
11.XX INTERNAL CLOCK ERROR **To continue press OK**	The real time clock has experienced an error.	Printing can continue, but a prompt appears every time you turn on the product. To resolve the issue, contact an HP-authorized service or support provider.
13.JJ.NT JAM IN <LOCATION> **13.JJ.NT JAM INSIDE <LOCATION>**	A jam has occurred in the specified location.	Remove the jammed paper. If the message persists after you have cleared all jams, a sensor might be stuck or broken. Contact an HP-authorized service or support provider.

Downloaded from www.Manualslib.com manuals search engine

Table 10-1 Control-panel messages (continued)

Control panel message	Description	Recommended action
13.JJ.NT PAPER JAM OPEN INPUT TRAYS alternates with **Open all trays**	A jam has occurred in a tray.	1. Open each tray and check for jammed paper. 2. Open the top cover. 3. Remove the print cartridge and any paper. 4. Reinstall the print cartridge and close the top cover. 5. Close all trays.
21 PAGE TOO COMPLEX **For help press ?** alternates with **21 PAGE TOO COMPLEX** **To continue press OK**	The data in the print job is too complex.	1. Press the OK button to print the transferred data (some data might be lost). 2. If this message displays often, simplify the print job or install more memory.
22 EIO X BUFFER OVERFLOW **To continue press OK**	Too much data was sent to the EIO card in the specified slot [X]. An improper communications protocol might be in use. Note: EIO 0 is reserved for the HP Jetdirect embedded print server.	1. Press the OK button to clear the message. (The job will not be printed.) 2. Check the host configuration. If the message persists, contact an HP-authorized service or support provider.
22 EMBEDDED I/O BUFFER OVERFLOW **To continue press OK**	Too much data was sent to the product's internal HP Jetdirect.	Press the OK button to continue printing. Some data might be lost.
22 USB I/O BUFFER OVERFLOW **To continue press OK**	Too much data was sent to the USB port.	Press the OK button to clear the error message. (The job will not be printed.)
40 EIO X BAD TRANSMISSION **To continue press OK**	The connection has been broken between the product and the EIO card in the specified slot [X]. Note: EIO 0 is reserved for the HP Jetdirect embedded print server.	Press the OK button to clear the error message and continue printing.
40 EMBEDDED I/O BAD TRANSMISSION **To continue press OK**	The connection has been broken between the product and HP Jetdirect print server.	Press the OK button to clear the error message and continue printing.
41.3 UNEXPECTED SIZE IN TRAY 1 **MANUALLY FEED <TYPE> <SIZE>**	You have configured Tray 1 for a different size of paper than the print job requires.	Reload the tray with the correct paper size. If another tray contains the correct size, the product prompts you to press the OK button to use another tray.

Downloaded from www.Manualslib.com manuals search engine

Table 10-1 Control-panel messages (continued)

Control panel message	Description	Recommended action
41.3 UNEXPECTED SIZE IN TRAY <X> **For help press ?** alternates with **LOAD TRAY <X> [TYPE] [SIZE]** **To use another tray press OK**	You have configured the tray for a different size of paper than the print job requires.	1. Reload the tray with the correct paper size. 2. Make sure the paper size that is specified in the software program, the printer driver, and the control panel are all the same. 3. Press the OK button and scroll to the **TRAY <X> SIZE = <Size>** option. Reconfigure the size in a tray to match the size required for the print job. 4. If the error does not clear, turn the product off and then on. 5. If the message persists, contact an HP-authorized service or support provider.
41.X ERROR **For help press ?** alternates with **41.X ERROR** **To continue press OK**	A temporary printing error occurred.	1. Press the OK button. The page containing the error automatically reprints if jam recovery is enabled. 2. Turn the product off and then on. 3. If the message persists, contact an HP-authorized service or support provider.
49.XXXX ERROR **To continue turn off then on**	A critical firmware error has occurred. This error could be caused by several external influences that are not directly related to the product hardware or firmware: • The computer operating system • The network connection • The printer driver • The software program • The document file To help isolate the cause of the problem, identify the actions you were performing before the error occurred.	1. Turn the product off for 20 minutes, and then turn it on. 2. If you can isolate the cause of the error to an external influence, try to resolve the problem by repairing the external component. 3. If the message persists, contact an HP-authorized service or support provider.
50.X FUSER ERROR **For help press ?**	A fuser error has occurred.	1. Turn the product off and then on. 2. If the message persists, contact an HP-authorized service or support provider.
51.XY ERROR **For help press ?** alternates with **51.XY ERROR** **To continue turn off then on**	A temporary printing error occurred.	1. Turn the product off and then on. 2. If the message persists, contact an HP-authorized service or support provider.

Downloaded from www.Manualslib.com manuals search engine

Table 10-1 Control-panel messages (continued)

Control panel message	Description	Recommended action
52.XY ERROR **For help press ?** alternates with **52.XY ERROR** **To continue turn off then on**	A temporary printing error occurred.	1. Turn the product off and then on. 2. If the message persists, contact an HP-authorized service or support provider.
53.X0.01 ERROR **UNSUPPORTED DIMM**	The product does not support the DIMM.	Replace the DIMM with one that the product supports. For a list of supported DIMMs, see Part numbers on page 201. For instructions to replace the DIMM, see Install memory on page 126.
55.XX.YY DC CONTROLLER ERROR **For help press ?** alternates with **55.XX.YY DC CONTROLLER ERROR** **To continue turn off then on**	A temporary printing error occurred.	1. Turn the product off and then on. 2. If the message persists, contact an HP-authorized service or support provider.
56.X ERROR **For help press ?** alternates with **56.X ERROR** **To continue turn off then on**	A temporary printing error occurred as a result of an incorrect input or output request.	1. Turn the product off and then on. 2. If the message persists, contact an HP-authorized service or support provider.
57.XX ERROR **For help press ?** alternates with **57.XX ERROR** **To continue turn off then on**	A temporary printing error occurred in one of the product fans.	1. Turn the product off and then on. 2. If the message persists, contact an HP-authorized service or support provider.

Downloaded from www.Manualslib.com manuals search engine

Table 10-1 Control-panel messages (continued)

Control panel message	Description	Recommended action
58.XX ERROR **For help press ?** alternates with **58.XX ERROR** **To continue turn off then on**	A product error has occurred where a memory tag CPU error was detected, or there is a problem with the air sensor or power supply.	To resolve problems with the power supply: 1. Remove the product from any UPS supplies, additional power supplies, or power strips. Plug the product into a wall outlet and see if this resolves the problem. 2. If the product is already plugged into a wall outlet, try another power source in the building that is independent of the one being used. Make sure the line voltage and current source meet the electrical specifications for the product. If the message persists, contact an HP-authorized service or support provider.
59.XY ERROR **For help press ?** alternates with **59.XY ERROR** **To continue turn off then on**	A temporary printing error occurred.	1. Turn the product off and then on. 2. If the message persists, contact an HP-authorized service or support provider.
68.X PERMANENT STORAGE FULL **For help press ?** alternates with **68.X PERMANENT STORAGE FULL** **To continue press OK**	The permanent storage is full. Some settings might have been reset to the factory defaults.	1. If the error does not clear, turn the product off and then on. 2. Print a configuration page and check the product settings to determine which values have changed. 3. To clean up permanent storage, turn the product off, and then press and hold the Menu button while turning the product on. 4. If the message persists, contact an HP-authorized service or support provider.
68.X PERMANENT STORAGE WRITE FAIL **To continue press OK**	The storage device is failing to write. Printing can continue, but there might be some unexpected behaviors because an error occurred in permanent storage.	Press the OK button to continue. If the error does not clear, turn the product off and then on. If the message persists, contact an HP-authorized service or support provider.
68.X STORAGE ERROR SETTINGS CHANGED **For help press ?** alternates with **68.X STORAGE ERROR SETTINGS CHANGED** **To continue press OK**	An error occurred in the product permanent storage and one or more product settings has been reset to its factory default.	Press the OK button to resume printing. Print a configuration page and check the product settings to determine which values have changed. If the error does not clear, turn the product off and then on. If the message persists, contact an HP-authorized service or support provider.

Downloaded from www.Manualslib.com manuals search engine

Table 10-1 Control-panel messages (continued)

Control panel message	Description	Recommended action
79.XXXX ERROR **To continue turn off then on**	The product detected a critical hardware error.	1. Press the stop button ⊗ to clear the print job from the product memory. Turn the product off and then on. 2. Try printing a job from a different program. If the job prints, go back to the first program and try printing a different file. If the message displays only with a certain program or print job, contact the software vendor for assistance. If the message persists with different programs and print jobs, try these steps. 1. Turn the product off. 2. Disconnect all cables to the product that connect it to the network or computer. 3. Remove all the memory DIMMs or third-party DIMMs from the product. Then reinstall the memory DIMM. 4. Remove the EIO device from the product. 5. Turn the product on. If the error no longer exists, follow these steps. 1. Install the DIMM and EIO device one at a time, making sure to turn the product off and then on as you install each device. 2. Replace the DIMM or EIO device that you determine caused the error. 3. Reconnect all cables that connect the product to the network or computer.
8X.YYYY EIO ERROR	The EIO accessory card in slot [X] has encountered a critical error.	1. Turn the product off and then on. 2. Turn the product off, reseat the EIO accessory in slot [X], and then turn the product on. 3. Turn the product off, remove the EIO accessory from slot [X], install it in a different EIO slot, and then turn the product on. 4. Replace the EIO accessory in slot [X].
8X.YYYY EMBEDDED JETDIRECT ERROR	The embedded HP Jetdirect print server has encountered a critical error.	1. Turn the product off and then on. 2. If the message persists, contact an HP-authorized service or support provider.

Downloaded from www.Manualslib.com manuals search engine

Table 10-1 Control-panel messages (continued)

Control panel message	Description	Recommended action
ACCEPT BAD SIGNATURE? **Yes press OK** alternates with **ACCEPT BAD SIGNATURE?** **No press ⊗**	The product is performing a remote firmware upgrade, the first-time code signing does not match the signature, and the **SIGNATURE CHECK** menu is set to the **PROMPT IF BAD** option.	Download the correct firmware upgrade file for this product, and then reinstall the upgrade.
Access denied MENUS LOCKED	The product control-panel function you are trying to use has been locked to prevent unauthorized access.	See your network administrator.
Action not currently available for tray x **Tray size cannot be ANY SIZE/ANY CUSTOM**	Duplexing is not available when the tray size is set to the **ANY SIZE** setting or the **ANY CUSTOM** setting.	Change tray settings. 1. Press the Menu button. 2. Press the down arrow ▼ to highlight the **PAPER HANDLING** menu, and then press the OK button. 3. Press the down arrow ▼ to highlight the specified tray, and then press the OK button. 4. Change the selected tray's size and type settings.
BAD OPTIONAL TRAY CONNECTION	An optional tray is not connected correctly.	Remove the product from the tray, and reinstall it. Then, turn the product off and then on.
Bad signature **Upgrade cancelled**	The firmware upgrade code does not match the product signature.	Download the correct firmware upgrade file for this product, and then reinstall the upgrade.
BLACK CARTRIDGE VERY LOW	The product indicates when a supply level is very low. Actual print cartridge life might vary. Consider having a replacement print cartridge available to install when print quality is no longer acceptable. You do not need to replace the print cartridge at this time unless print quality is no longer acceptable. After an HP supply has reached the very low threshold, the HP premium protection warranty for that supply has ended.	If print quality is no longer acceptable, replace the print cartridge. See Change the print cartridge on page 122.
Canceling...	The product is canceling a job. The message continues while the product clears the paper path and clears any remaining incoming data.	No action is necessary.
CANNOT DUPLEX **CLOSE REAR DOOR** **For help press ?**	The rear door must be closed to duplex.	Close the rear door.
Checking paper path	The product is checking for possible jams or paper that was not cleared from the product.	No action is necessary.
Checking printer	The product is checking for possible jams or paper that was not cleared from the product.	No action is necessary.

Downloaded from www.Manualslib.com manuals search engine

Table 10-1 Control-panel messages (continued)

Control panel message	Description	Recommended action
CHOSEN PERSONALITY NOT AVAILABLE **To continue press OK**	The product received a request for a personality (product language) that does not exist. The print job is canceled.	Print the job using a printer driver for a different product language, or add the requested language to the product (if available). To see a list of available personalities, print a configuration page.
CLEANING DISK <X>% COMPLETE **Do not power off** alternates with **CLEANING DISK <X>% COMPLETE** **For help press ?**	The storage device is being sanitized or cleaned. Do not turn off. Product functions are unavailable. The product automatically turns off and then on when finished.	No action is necessary.
CLEANING PAGE ERROR **Open rear door**	You are processing a cleaning page with the rear door closed.	Open the rear output bin to begin creating or processing the cleaning page.
CLEANING... **DO NOT GRAB PAPER**	The product is performing an automatic cleaning.	No action is necessary.
Clearing event log	The product is clearing the event log.	No action is necessary.
Clearing paper path	The product jammed or was turned on and paper was detected in a wrong location. The product is automatically attempting to eject the pages.	Wait for the product to finish trying to clear the pages. If it cannot, a jam message displays on the control panel.
CODE CRC ERROR **SEND RFU UPGRADE ON USB DEV PORT**	An error occurred during a firmware upgrade.	Contact an HP-authorized service or support provider.
DATA RECEIVED **To print last page press OK** alternates with **<current status message>**	The product is waiting for the print command.	Press the OK button to continue.
DATE/TIME = YYYY/MMM/DD HH:MM **To change press OK** **To skip press ⊗**	The current date and time.	Set the date and time or press the stop button ⊗ to skip.
Deleting...	Product is deleting a stored job.	No action is necessary.
DUPLEX OPERATION FAILED **To continue press OK** alternates with **DUPLEX OPERATION FAILED** **For help press ?**	A timing error has occurred during a duplex printing job.	Press the OK button to continue printing. If the error occurs again, cancel the job and print it as a single-sided job.

Downloaded from www.Manualslib.com manuals search engine

Table 10-1 Control-panel messages (continued)

Control panel message	Description	Recommended action
EIO <X> DISK NOT FUNCTIONAL **For help press ?**	The EIO disk in slot X is not working correctly.	1. Turn the product off. 2. Make sure the EIO disk is inserted correctly and securely fastened. 3. If the control panel message continues to appear, replace the disk.
EIO <X> DISK SPINNING UP alternates with **<Current status message>**	The disk accessory in EIO slot [X] is initializing.	No action is necessary.
EIO DEVICE FAILURE **To clear press OK**	The specified device has failed.	Press the OK button to continue.
EIO FILE OPERATION FAILED **To clear press OK**	A command attempted an illogical operation.	Press the OK button to continue.
EIO FILE SYSTEM IS FULL **To clear press OK**	The specified file system is full and cannot be written to.	Press the OK button to continue.
EIO IS WRITE PROTECTED **To clear press OK**	The file system cannot be written to.	Press the OK button to continue.
Event log empty	You are attempting to view an empty event log by selecting the **SHOW EVENT LOG** option from the control panel.	No action is necessary.
INCOMPATIBLE BLACK CARTRIDGE	The print cartridge is for another product.	Replace the print cartridge with a print cartridge for this product. See Change the print cartridge on page 122. For information about print cartridges that this product supports, see Part numbers on page 201.
Incorrect	The wrong PIN number was entered.	Reenter PIN number.
INFLATE FAILURE **SEND RFU UPGRADE ON USB DEV PORT**	An error occurred during a firmware upgrade.	Contact an HP-authorized service or support provider.
Initializing	Individual tasks are being initialized.	No action is necessary.
INSERT OR CLOSE TRAY <X> **For help press ?**	The specified tray is open or missing.	Insert or close the tray for printing to continue.
INSTALL BLACK CARTRIDGE **For help press ?**	The print cartridge is missing.	1. Open the top cover. 2. Install the cartridge. 3. Close the top cover.

Downloaded from www.Manualslib.com manuals search engine

Table 10-1 Control-panel messages (continued)

Control panel message	Description	Recommended action
INSUFFICIENT MEMORY TO LOAD FONTS/DATA **For help press ?** alternates with **<DEVICE>** **To continue press OK**	The product received more data than can fit in its available memory. You might have tried to transfer too many macros, soft fonts, or complex graphics.	Press the OK button to print the transferred data (some data might be lost). Simplify the print job or install additional memory.
LOAD TRAY 1 [TYPE] [SIZE] **To continue press OK** alternates with **LOAD TRAY 1 [TYPE] [SIZE]** **For help press ?**	Tray 1 is empty.	Load Tray 1 with the requested paper. If the paper is already in the Tray 1, press the help button **?**, and then press the OK button to print. To use another tray, remove paper from Tray 1, and then press the OK button to continue.
LOAD TRAY 1 [TYPE] [SIZE] **To use another tray press OK** alternates with **LOAD TRAY 1 [TYPE] [SIZE]** **For help press ?**	Tray 1 is empty and other trays are available.	Press the OK button to use another tray. To use Tray 1, load it with the requested paper. If the paper is already in the Tray 1, press the help button **?**, and then press the OK button to print. To use another tray, remove paper from Tray 1, and then press the OK button to use another tray.
LOAD TRAY <X> [TYPE] [SIZE] **For help press ?**	The indicated tray is configured for a specific type and size of paper needed by a print job, but the tray is empty. All other trays are also empty.	Load the requested paper in the tray.
LOAD TRAY <X> [TYPE] [SIZE] **To use another tray press OK** alternates with **LOAD TRAY <X> [TYPE] [SIZE]** **For help press ?**	A job is sent that requires a specific type and size that is not available in the tray that is indicated.	Press the OK button to use a type and size that are available in another tray.
MANUALLY FEED <TYPE> <SIZE>	The product is waiting for you to load paper in Tray 1.	If paper is already in the Tray 1, press the help button **?**, and then press the OK button to print. To use another tray, remove paper from Tray 1, and then press the OK button.
MANUALLY FEED <TYPE> <SIZE> **To continue press OK** alternates with **MANUALLY FEED <TYPE> <SIZE>** **For help press ?**	The product is waiting for you to load paper in Tray 1.	Load the requested paper into Tray 1 and press the OK button.

Downloaded from www.Manualslib.com manuals search engine

Table 10-1 Control-panel messages (continued)

Control panel message	Description	Recommended action
MANUALLY FEED <TYPE> <SIZE> **To use another tray press OK** alternates with **MANUALLY FEED <TYPE> <SIZE>** **For help press ?**	The product is waiting for you to load paper in Tray 1.	Press the OK button to use a type and size that are available in another tray.
MANUALLY FEED OUTPUT STACK **Then press OK to print second sides**	The first side of a manual duplex job has been printed and the product is waiting for you to insert the output stack to complete the second side.	1. Load the output stack into Tray 1, maintaining the same orientation with printed side down. 2. To continue printing, press the OK button.
MEM TEST FAILURE REPLACE DIMM <X>	The product has detected an error with the DIMM.	Replace the DIMM. See Install memory on page 126. For a list of DIMMs that this product supports, see Part numbers on page 201.
No job to cancel	The stop button ⊗ was pressed, but there is no active job or buffered data to cancel. The message is displayed for approximately 2 seconds before the product returns to the ready state.	No action is necessary.
Non-HP supply installed	You have installed a print cartridge that Hewlett-Packard did not make.	If you believe you purchased a genuine HP supply, go to www.hp.com/go/anticounterfeit.
OUTPUT BIN FULL **Remove all paper from bin**	The output bin is full, and printing cannot continue.	Empty the bin so that the current print job can finish.
OUTPUT BIN FULL **Remove all paper from bin** alternates with **<Current status message>**	The output bin is full, but it is not needed for the current print job.	Empty the bin before sending a job to that bin.
Paper Wrapped Around Fuser **For help press ?**	Paper is wrapped around the fuser, and the product has jammed.	Contact an HP-authorized service or support provider.
Please wait	The product is going offline.	No action is necessary.
Processing Upgrade <component> <XXX> % **Do not power off**	Firmware is being upgraded in several stages.	No action is necessary.
RAM DISK DEVICE FAILURE **To clear press OK**	The specified device has failed.	Press the OK button to continue.
RAM DISK FILE OPERATION FAILED **To clear press OK**	A command attempted an illogical operation.	Press the OK button to continue.

Downloaded from www.Manualslib.com manuals search engine

Table 10-1 Control-panel messages (continued)

Control panel message	Description	Recommended action
RAM DISK FILE SYSTEM IS FULL **To clear press OK**	The specified file system is full and cannot be written to.	Press the OK button to continue.
RAM DISK IS WRITE PROTECTED **To clear press OK**	The device cannot be written to.	Press the OK button to continue.
READING <DIRECTORY> XXXX files found XXXX supported	The product is reading the files in the USB folder.	No action is necessary.
Request accepted please wait	The request to print an internal page is waiting to print.	Wait for the current job to finish printing.
Restoring factory settings	Factory settings are being restored.	No action is necessary.
Restoring...	The specific settings are being restored.	No action is necessary.
RFU LOAD ERROR **SEND RFU UPGRADE ON USB DEV PORT**	An error occurred during a firmware upgrade.	Contact an HP-authorized service or support provider.
ROM DISK DEVICE FAILURE **To clear press OK**	The specified device has failed.	Press the OK button to continue.
ROM DISK FILE OPERATION FAILED **To clear press OK**	A command attempted an illogical operation.	Press the OK button to continue.
ROM DISK FILE SYSTEM IS FULL **To clear press OK**	The specified file system is full and cannot be written to.	Press the OK button to continue.
ROM DISK IS WRITE PROTECTED **To clear press OK**	The device cannot be written to.	Press the OK button to continue.
SANITIZING DISK <X>% COMPLETE **Do not power off** alternates with **SANITIZING DISK <X>% COMPLETE** **For help press ?**	A hard disk is being sanitized.	No action is necessary.
SIZE MISMATCH IN TRAY X **For help press ?** alternates with **<Current status message>**	The tray indicated is loaded with a different size of paper than the size configured for the tray.	Load the tray with the size configured for the tray. Make sure that the guides are positioned correctly in the specified tray. Printing can continue from other trays.
Sleep mode on	The product is in Sleep mode.	No action is necessary.
SUPPLY MEMORY WARNING **Economode disabled**	The product cannot read the memory in the print cartridge.	If you believe you purchased a genuine HP supply, go to www.hp.com/go/anticounterfeit.

Downloaded from www.Manualslib.com manuals search engine

Table 10-1 Control-panel messages (continued)

Control panel message	Description	Recommended action
Too many trays installed **Turn power off and uninstall a tray**	You have installed more optional trays than the product supports. The product can accept up to two optional 500-sheet trays.	Remove one of the optional trays.
Too many USB accessories **For help press ?**	The does not support this many USB storage accessories.	Remove the extra USB storage accessories until this message goes away. Then, remove and reinsert the new USB storage accessory.
Too many USB hubs **Remove latest USB hub**	The product has detected that a USB hub is connected to another USB hub.	Remove the extra USB hub. The product does not support USB hubs connected to other USB hubs.
TRAY <X> [TYPE] [SIZE] **To change size or type press OK** alternates with **TRAY <X> [TYPE] [SIZE]** **To accept settings press ⮌**	This message states the current type and size configuration of the paper tray, and allows you to change the configuration.	To change the paper size or type press the OK button while the message is present. To clear the message, press the back arrow ⮌ while the message is present. • Select the **ANY SIZE** and **ANY TYPE** settings if the tray is used frequently for different sizes or types. • Set size and type to a specific setting if printing with only one type of paper.
TRAY <X> OPEN **For help press ?** alternates with **<Current status message>**	The tray cannot feed paper to the product because tray [X] is open and must be closed for printing to continue.	Check the trays and close any that are open.
Unable to add more files to print **Wait for a job to finish printing**	The print queue has the maximum number of jobs.	Wait for a job to finish before adding another job to the print queue.
UNABLE TO READ ENTIRE DIRECTORY **To continue press OK**	The list of files on the USB accessory is longer than the product can display.	1. To print a file from the partial list, press the OK button and then select a file from the list. 2. To prevent this problem, remove files from the USB accessory.
UNABLE TO STORE JOB alternates with **<Current status message>**	The print job named cannot be stored because of a memory, disk, or configuration problem.	Correct the error and then try again to store the job.
UNSUPPORTED SUPPLY IN USE	The print cartridge is for a different HP product.	If print quality is no longer acceptable, replace the print cartridge. See Change the print cartridge on page 122. For a list of supported print cartridges, see Part numbers on page 201.
UNSUPPORTED SUPPLY INSTALLED	The print cartridge is for a different HP product.	If print quality is no longer acceptable, replace the print cartridge. See Change the print cartridge on page 122. For a list of supported print cartridges, see Part numbers on page 201.

Downloaded from www.Manualslib.com manuals search engine

Table 10-1 Control-panel messages (continued)

Control panel message	Description	Recommended action
USB ACCESSORY NEEDS TOO MUCH POWER **Remove USB accessory and then turn off then on** alternates with **USB ACCESSORY NEEDS TOO MUCH POWER** **For help press ?**	The USB accessory is drawing too much electrical current. Printing cannot continue.	Remove the USB accessory, and then restart the product. Use a USB accessory that uses less power or that contains its own power supply.
USB accessory not recognized **For help press ?** alternates with **USB accessory not recognized** **To clear press OK**	The product does not support plug-and-play operation for the type of USB accessory in the host USB port, or the accessory is not supported	With the USB accessory connected, turn the product off and then on. If the message reappears, remove the USB accessory.
USB printing unavailable **For help press ?**	The administrator has disabled printing from USB accessories.	Print the job from a computer that is connected to the product.
USB storage accessory removed **Clearing any unassociated data**	You have removed the USB accessory from the product. The product cancels any jobs from the accessory that are in the print queue.	To print the remaining jobs, reinsert the USB accessory and select the jobs again.
USB STORAGE DEVICE FAILURE **To clear press OK**	The specified device has failed.	Press the OK button to continue.
USB STORAGE FILE OPERATION FAILED **To clear press OK**	A command attempted an illogical operation.	Press the OK button to continue.
USE TRAY <X> [TYPE] [SIZE] **To change press ▲/▼.** **To use press OK**	The product did not detect the type and size of paper requested. The message shows the most likely type and size available and the tray in which they are available.	Press the OK button to accept the values in the message, or press the up or down arrow ▲/▼ to scroll through the available choices.
USED SUPPLY IN USE **Economode disabled**	The print cartridge has been previously used.	If you believe you purchased a genuine HP supply, go to www.hp.com/go/anticounterfeit.
USED SUPPLY INSTALLED	The print cartridge has been previously used.	Press the OK button to use this cartridge, or install a new cartridge. If you believe you purchased a genuine HP supply, go to www.hp.com/go/anticounterfeit.

Downloaded from www.Manualslib.com manuals search engine

Table 10-1 Control-panel messages (continued)

Control panel message	Description	Recommended action
Wait for printer to reinitialize	This message can appear for a variety of reasons: • The RAM DISK settings changed before the product restarted. • The product is restarting after changing external device modes. • You have exited the **DIAGNOSTICS** menu. • A new formatter has been installed with an old product, or a new product has been installed with an old formatter.	No action is necessary.
WARMING UP alternates with **<Current status message>**	The product is coming out of sleep mode. Printing continues when it is done.	No action is necessary.

Downloaded from www.Manualslib.com manuals search engine

Jams

Common causes of jams

Many jams are caused by using paper that does not meet HP specifications. For complete paper specifications for all HP LaserJet products, see the *HP LaserJet Printer Family Print Media Guide*. This guide is available at www.hp.com/support/ljpaperguide.

The product is jammed.[1]

Cause	Solution
The paper does not meet specifications.	Use only paper that meets HP specifications. See Paper and print media on page 73.
A component is installed incorrectly.	Verify that all components are correctly installed.
You are using paper that has already passed through a product or copier.	Do not use paper that has been previously printed on or copied.
A tray is loaded incorrectly.	Remove any excess paper from the tray. Make sure that the stack is below the maximum stack height mark in the tray. See Load trays on page 81.
The paper is skewed.	The tray guides are not adjusted correctly. Adjust them so they hold the stack firmly in place without bending it.
The paper is binding or sticking together.	Remove the paper, flex it, rotate it 180°, or flip it over. Reload the paper into the tray. **NOTE:** Do not fan paper. Fanning can create static electricity, which can cause paper to stick together.
The paper is removed before it settles into the output bin.	Reset the product. Wait until the page completely settles in the output bin before removing it.
During two-sided printing, you removed the paper before the second side of the document was printed.	Reset the product and print the document again. Wait until the page completely settles in the output bin before removing it.
The paper is in poor condition.	Replace the paper.
The internal rollers from the tray are not picking up the paper.	Remove the top sheet of paper. If the paper is too heavy, it might not be picked from the tray.
The paper has rough or jagged edges.	Replace the paper.
The paper is perforated or embossed.	Perforated or embossed paper does not separate easily. Feed single sheets from Tray 1.
Product supply items have reached the end of their useful life.	Check the product control panel for messages alerting you of supplies status, or print a supplies status page to verify the remaining life of the supplies. See Print the information and show-me-how pages on page 108.
Paper was not stored correctly.	Replace the paper in the trays. Paper should be stored in the original packaging in a controlled environment.

[1] If the product continues to jam, contact HP Customer Support or your authorized HP service provider.

Downloaded from www.Manualslib.com manuals search engine

Clear jams

Clear jams from Tray 1

TIP: To see an animation of this procedure go to this Web site: www.hp.com/go/ljp3010-tray1-jams.

1. Slowly pull the jammed paper or other print media out of the product. If part of the paper has already been pulled into the product, see Clear jams from the top cover on page 167.

2. Press the OK button to clear the message.

Downloaded from www.Manualslib.com manuals search engine

Clear jams from Tray 2 or an optional 500-sheet tray

TIP: To see an animation of this procedure go to this Web site: www.hp.com/go/ljp3010-tray2-jams.

1. Remove the tray from the product.

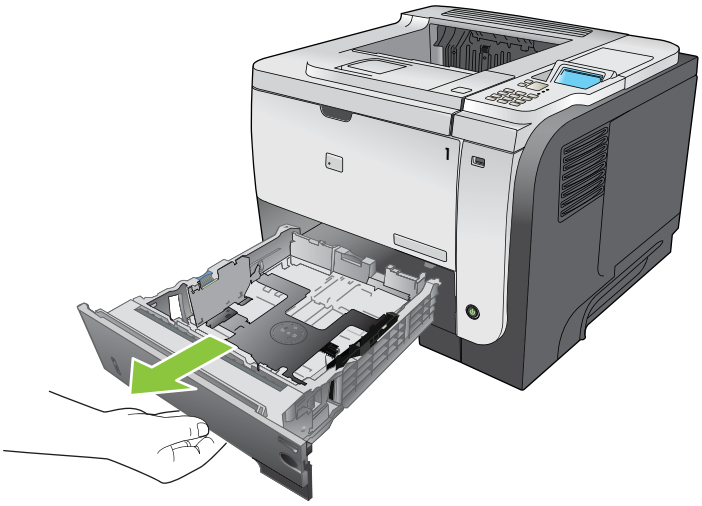

2. Remove any damaged paper from the tray, and then reinsert the tray.

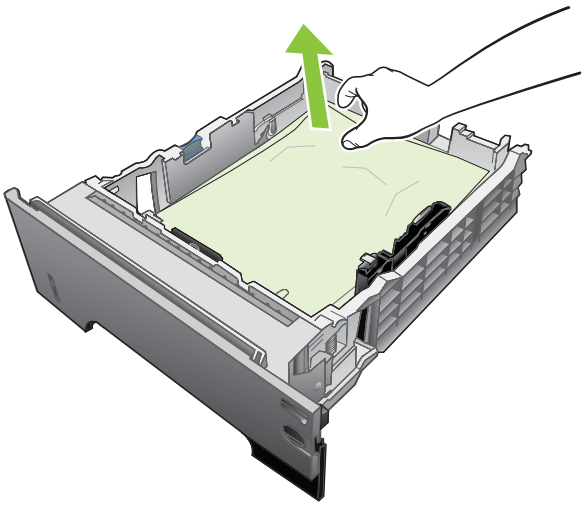

Downloaded from www.Manualslib.com manuals search engine

3. Press the top-cover-release button, and open the top cover.

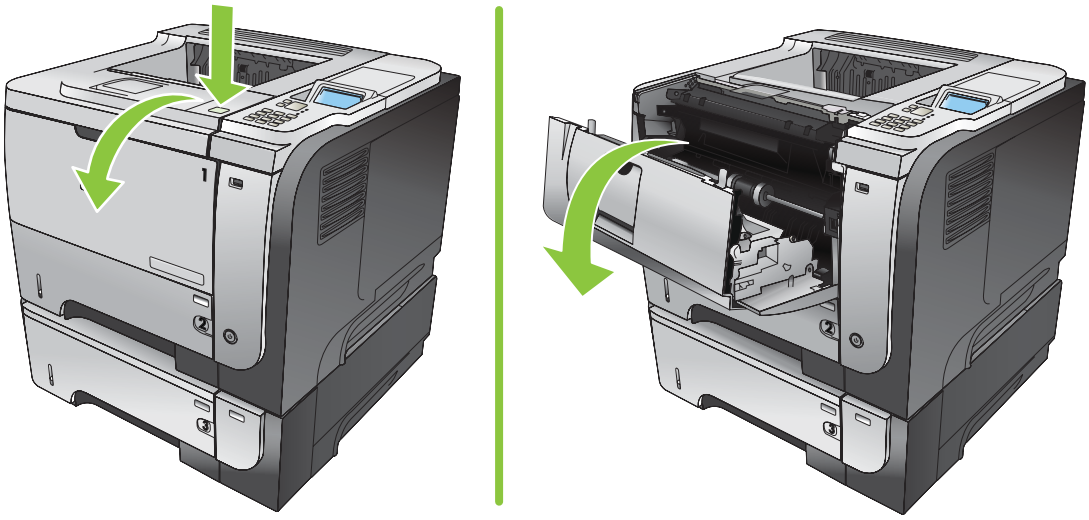

4. Remove the print cartridge.

5. Remove any jammed paper.

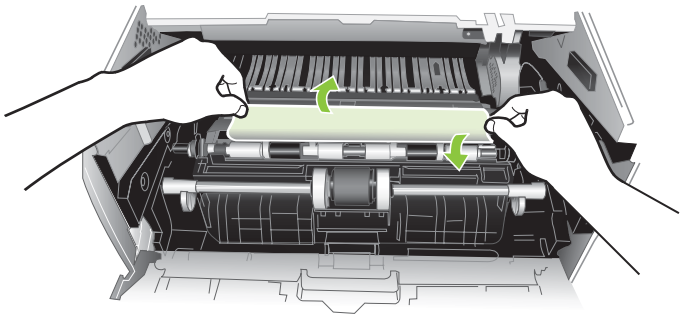

Downloaded from www.Manualslib.com manuals search engine

6. Reinsert the print cartridge.

7. Close the top cover.

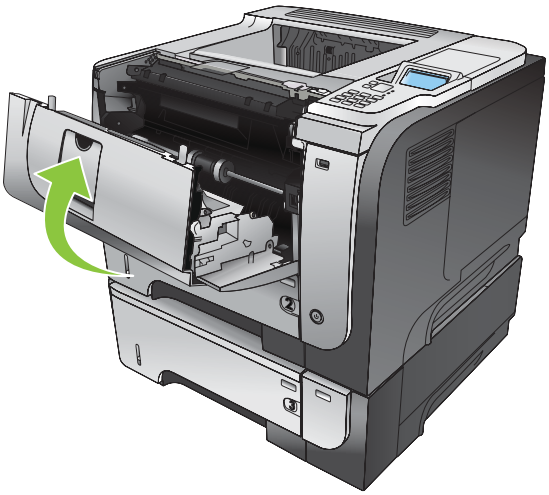

Downloaded from www.Manualslib.com manuals search engine

Clear jams from the top cover

TIP: To see an animation of this procedure go to this Web site: www.hp.com/go/ljp3010-jams-top.

1. Press the top-cover-release button, and open the top cover.

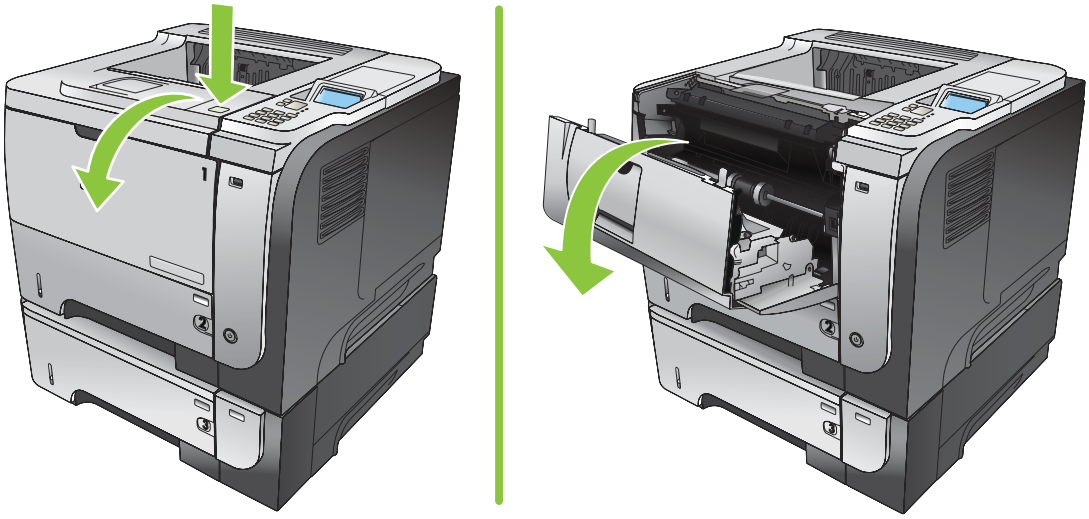

2. Remove the print cartridge.

3. Remove any jammed paper.

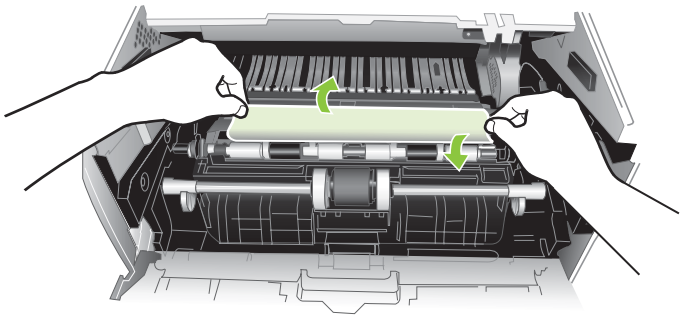

Downloaded from www.Manualslib.com manuals search engine

4. Reinsert the print cartridge.

5. Close the top cover.

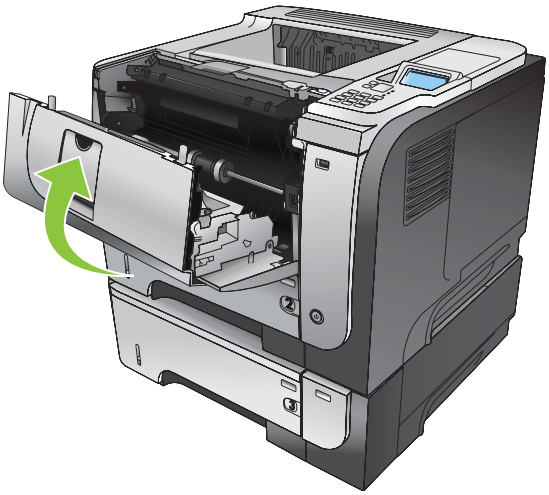

Downloaded from www.Manualslib.com manuals search engine

Clear jams from the rear door and the fuser area

TIP: To see an animation of this procedure go to this Web site: www.hp.com/go/ljp3010-jams-rear.

1. Open the rear door, and push down so it is fully opened to a 90° angle.

   NOTE: The rear door has two positions. It opens to a 45° angle for the rear output bin and to a 90° angle for clearing jams.

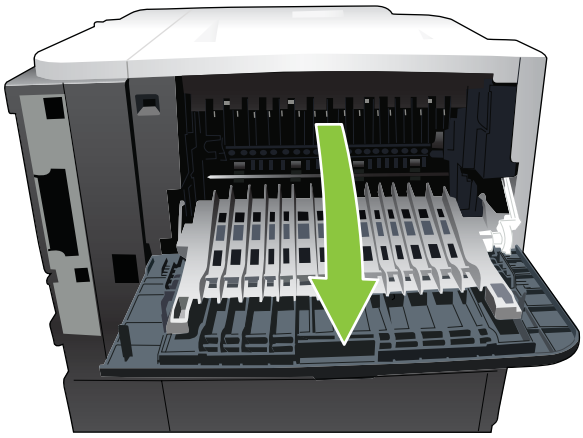

2. Remove any jammed paper.

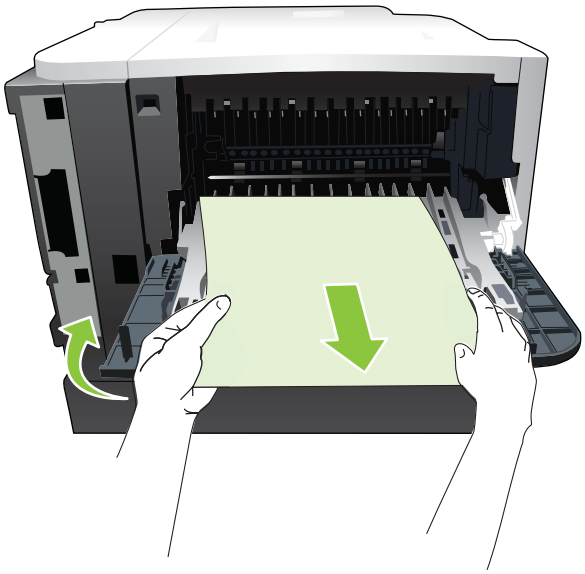

Downloaded from www.Manualslib.com manuals search engine

3. Press the top-cover-release button, and open the top cover.

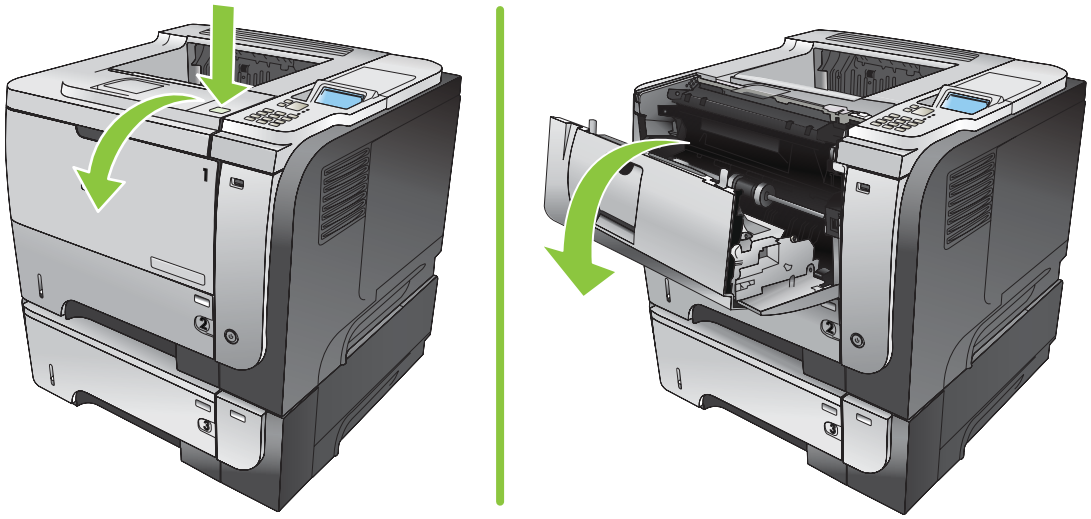

4. Close the rear door.

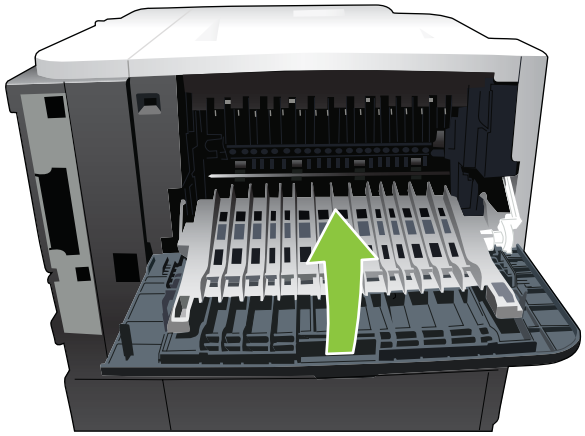

5. Remove the print cartridge.

Downloaded from www.Manualslib.com manuals search engine

6. Remove any jammed paper.

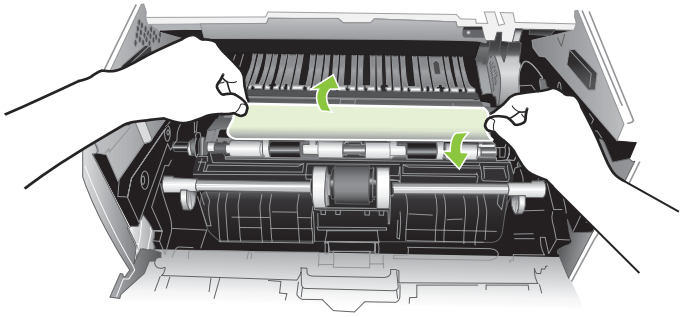

7. Reinsert the print cartridge.

8. Close the top cover.

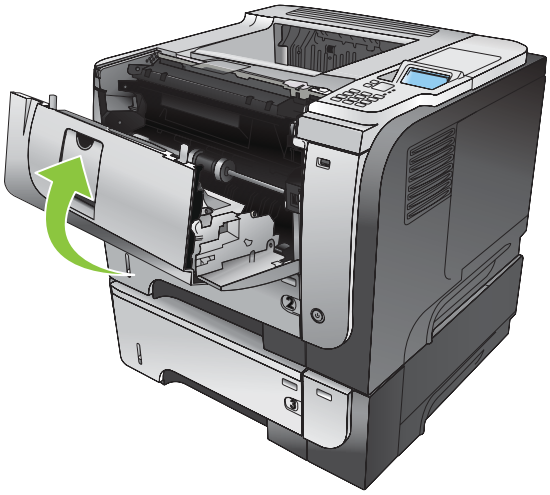

Downloaded from www.Manualslib.com manuals search engine

Clear jams from the duplexer

TIP: To see an animation of this procedure go to this Web site: www.hp.com/go/ljp3010-jams-duplexer.

1. Remove Tray 2 completely from the product.

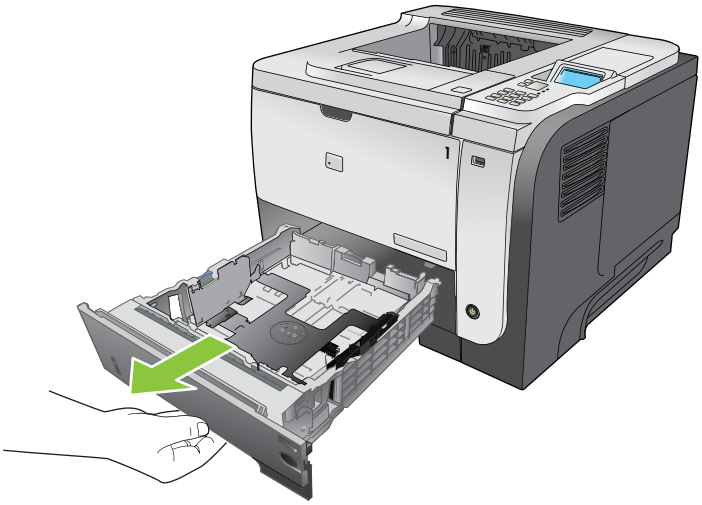

2. Push the green button to release the duplex pan.

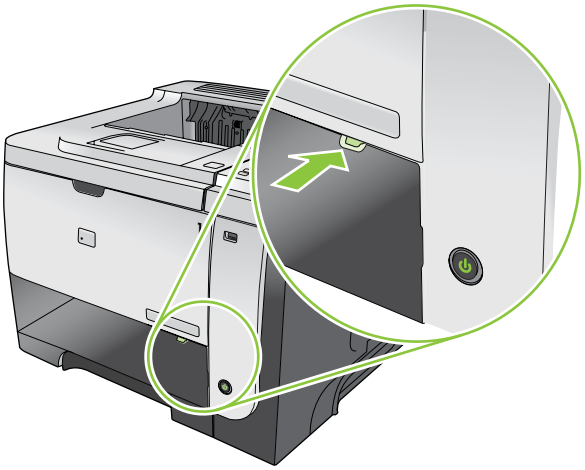

3. Remove any jammed paper.

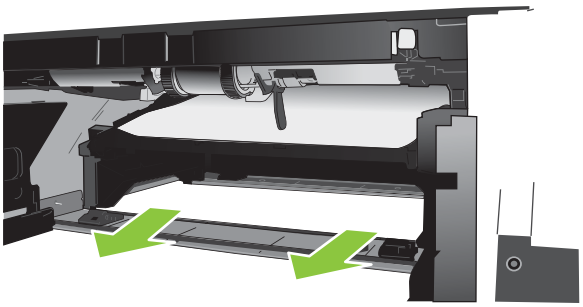

Downloaded from www.Manualslib.com manuals search engine

4. Close the duplex pan.

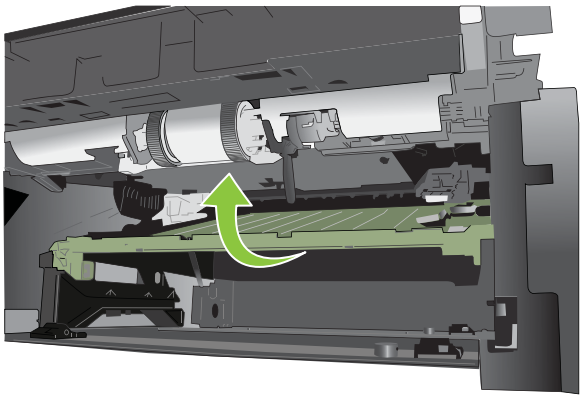

5. Reinsert Tray 2.

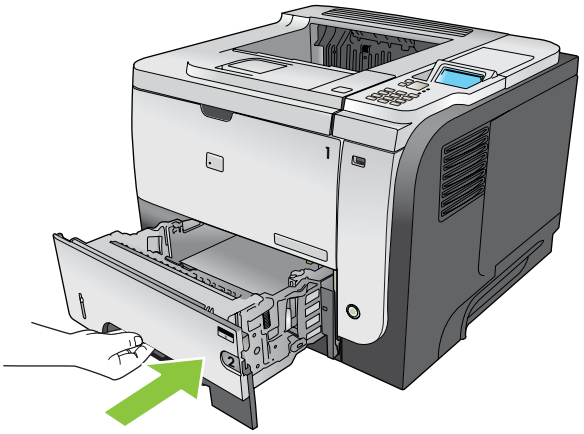

6. Open the rear door, and push down so it is fully opened to a 90° angle.

NOTE: The rear door has two positions. It opens to a 45° angle for the rear output bin and to a 90° angle for clearing jams.

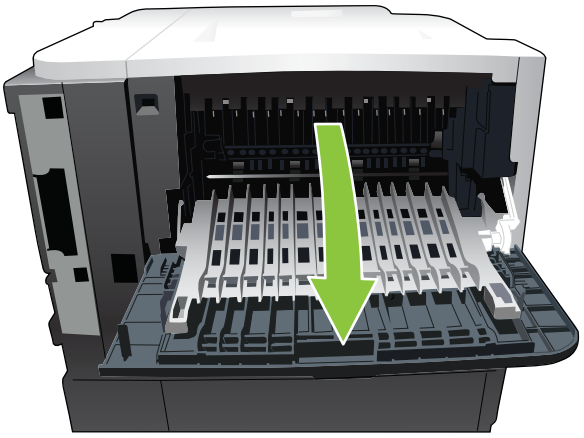

Downloaded from www.Manualslib.com manuals search engine

7. Remove any jammed paper.

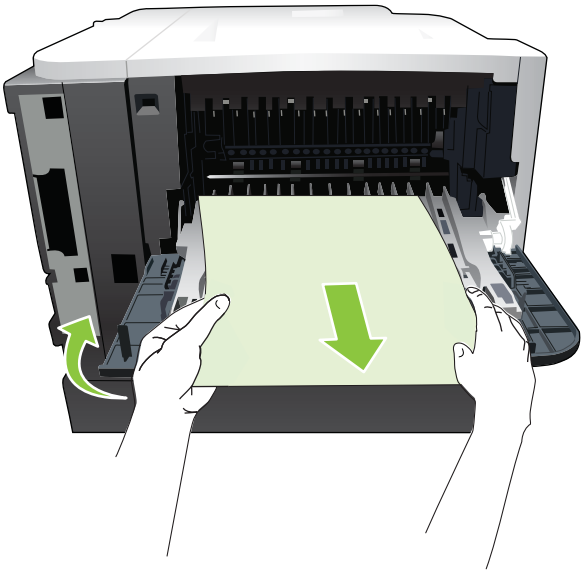

8. Press the top-cover-release button, and open the top cover.

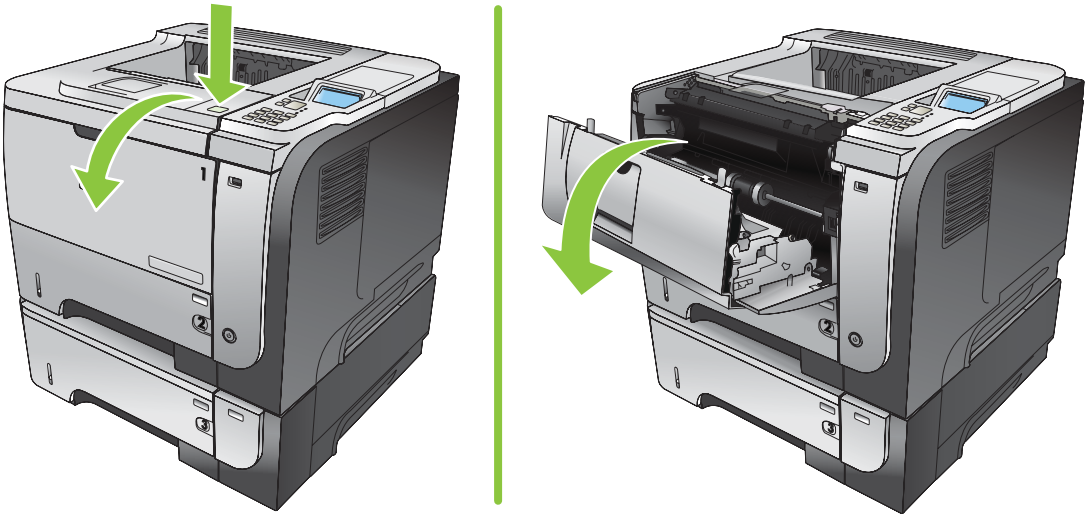

9. Close the rear door.

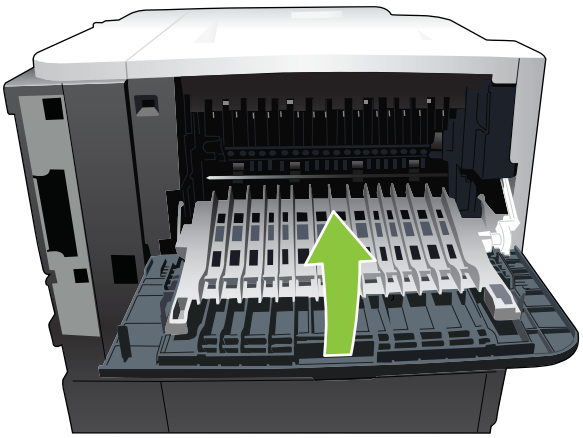

Downloaded from www.Manualslib.com manuals search engine

10. Remove the print cartridge.

11. Remove any jammed paper.

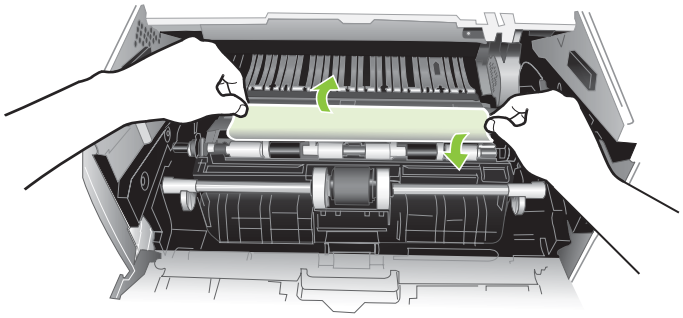

12. Reinsert the print cartridge.

Downloaded from www.Manualslib.com manuals search engine

13. Close the top cover.

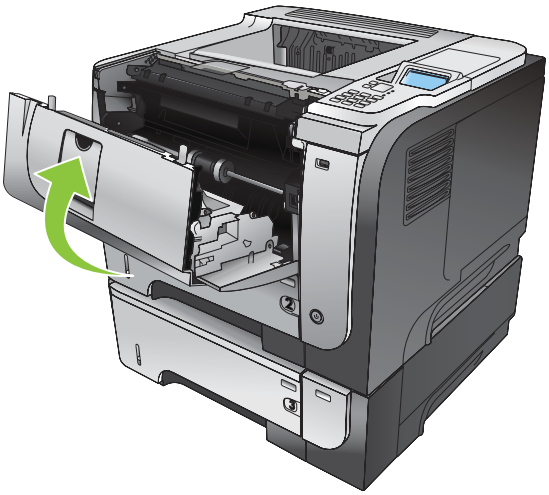

Jam recovery

This product provides a jam recovery feature that reprints jammed pages. The following options are available:

- **AUTO** — The product attempts to reprint jammed pages when sufficient memory is available. This is the default setting.
- **OFF** — The product does not attempt to reprint jammed pages. Because no memory is used to store the most recent pages, performance is optimal.

  NOTE: When using this option, if the product runs out of paper and the job is being printed on both sides, some pages can be lost.

- **ON** — The product always reprints jammed pages. Additional memory is allocated to store the last few pages printed. This might cause overall performance to suffer.

Set the jam recovery feature

1. Press the Menu button.
2. Press the down arrow ▼ to highlight the **CONFIGURE DEVICE** menu, and then press the OK button.
3. Press the down arrow ▼ to highlight the **SYSTEM SETUP** menu, and then press the OK button.
4. Press the down arrow ▼ to highlight the **JAM RECOVERY** menu, and then press the OK button.
5. Press the down arrow or up arrow ▼/▲ to highlight the appropriate setting, and then press the OK button.
6. Press the Menu button to return to the **Ready** state.

Downloaded from www.Manualslib.com manuals search engine

Paper-handling problems

Use only paper that meets the specifications outlined in the *HP LaserJet Printer Family Print Media Guide*. Always configure the paper type on the control panel to match the type of paper that is loaded in the tray.

Product feeds multiple sheets

Product feeds multiple sheets

Cause	Solution
The input tray is overfilled. Open the tray and verify that the paper stack is below the maximum stack height mark.	Remove excess paper from the input tray.
Print paper is sticking together.	Remove paper, flex it, rotate it 180 degrees or flip it over, and then reload it into the tray. **NOTE:** Do not fan paper. Fanning can cause static electricity, which can cause paper to stick together.
Paper does not meet the specifications for this product.	Use only paper that meets HP paper specifications for this product.
Trays are not properly adjusted.	Make sure that the paper guides match the size of paper being used.

Product feeds incorrect page size

Product feeds incorrect page size

Cause	Solution
The correct size paper is not loaded in the input tray.	Load the correct size paper in the input tray.
The correct size paper is not selected in the software program or printer driver.	Confirm that the settings in the software program and printer driver are correct, because the software program settings override the printer driver and control panel settings, and the printer driver settings override the control panel settings. For more information, see Change printer-driver settings for Windows on page 47 or Change printer-driver settings for Macintosh on page 56.
The correct size paper for the tray is not selected in the product control panel.	From the control panel, select the correct size paper for the tray.
The paper size is not configured correctly for the input tray.	Print a configuration page or use the control panel to determine the paper size for which the tray is configured.
The guides in the tray are not against the paper.	Verify that the paper guides are touching the paper.

Downloaded from www.Manualslib.com manuals search engine

Product pulls from incorrect tray

Product pulls from incorrect tray

Cause	Solution
You are using a driver for a different product.	Use a driver for this product.
The specified tray is empty.	Load paper in the specified tray.
The paper size is not configured correctly for the input tray.	Print a configuration page or use the control panel to determine the paper size for which the tray is configured.

Paper does not feed automatically

Paper does not feed automatically

Cause	Solution
Manual feed is selected in the software program.	Load Tray 1 with paper, or, if the paper is loaded, press the OK button.
The correct size paper is not loaded.	Load the correct size paper.
The input tray is empty.	Load paper into the input tray.
Paper from a previous jam has not been completely removed.	Open the product and remove any paper in the paper path.
The paper size is not configured correctly for the input tray.	Print a configuration page or use the control panel to determine the paper size for which the tray is configured.
The guides in the tray are not against the paper.	Verify that the rear and width paper guides are touching the paper.
The manual-feed prompt is set to **ALWAYS**. The product always prompts for manual feed, even if the tray is loaded.	Open the tray, reload the media, and then close the tray. Or, change the manual-feed prompt setting to **UNLESS LOADED**, so that the product prompts for manual feed only when the tray is empty.
The **USE REQUESTED TRAY** setting on the product is set to **EXCLUSIVELY**, and the requested tray is empty. The product will not use another tray.	Load the requested tray. Or, change the setting from **EXCLUSIVELY** to **FIRST** on the **CONFIGURE DEVICE** menu. The product can use other trays if no media is loaded in the specified tray.

Downloaded from www.Manualslib.com manuals search engine

Paper does not feed from Tray 2, 3, or 4

Paper does not feed from Tray 2 or 3

Cause	Solution
The correct size paper is not loaded.	Load the correct size paper.
The input tray is empty.	Load paper in the input tray.
The correct paper type for the input tray is not selected in the product control panel.	From the product control panel, select the correct paper type for the input tray.
Paper from a previous jam has not been completely removed.	Open the product and remove any paper in the paper path. Closely inspect the fuser area for jams.
None of the optional trays appear as input tray options.	The optional trays only display as available if they are installed. Verify that any optional trays are correctly installed. Verify that the printer driver has been configured to recognize the optional trays.
An optional tray is incorrectly installed.	Print a configuration page to confirm that the optional tray is installed. If not, verify that the tray is correctly attached to the product.
The paper size is not configured correctly for the input tray.	Print a configuration page or use the control panel to determine the paper size for which the tray is configured.
The guides in the tray are not against the paper.	Verify that the guides are touching the paper.

Transparencies or glossy paper will not feed

Transparencies or glossy paper will not feed

Cause	Solution
The correct paper type is not specified in the software or printer driver.	Verify that the correct paper type is selected in the software or printer driver.
The input tray is overfilled.	Remove excess paper from the input tray. Do not exceed the maximum stack height marks for the tray.
Paper in another input tray is the same size as the transparencies, and the product is defaulting to the other tray.	Make sure that the input tray containing the transparencies or glossy paper is selected in the software program or printer driver. Use the product control panel to configure the tray to the paper type loaded.
The tray containing the transparencies or glossy paper is not configured correctly for type.	Make sure that the input tray containing the transparencies or glossy paper is selected in the software program or printer driver. Use the product control panel to configure the tray to the paper type loaded.
Transparencies or glossy paper might not meet supported paper specifications.	Use only paper that meets the HP paper specifications for this product.
High-humidity environments may cause glossy paper not to feed, or to feed too many sheets.	Avoid printing glossy paper in high humidity conditions. When printing glossy paper, removing the paper from the wrapper and letting it rest for a few hours can improve feeding into the product. However, letting paper rest in humid environments may also cause blisters.

Downloaded from www.Manualslib.com manuals search engine

Envelopes jam or will not feed in the product

Envelopes jam or will not feed in the product

Cause	Solution
Envelopes are loaded in an unsupported tray. Only Tray 1 can feed envelopes.	Load envelopes into Tray 1.
Envelopes are curled or damaged.	Try using different envelopes. Store envelopes in a controlled environment.
Envelopes are sealing because the moisture content is too high.	Try using different envelopes. Store envelopes in a controlled environment.
Envelope orientation is incorrect.	Verify that the envelope is loaded correctly.
This product does not support the envelopes being used.	Refer to the *HP LaserJet Printer Family Print Media Guide*.
Tray 1 is configured for a size other than envelopes.	Configure Tray 1 size for envelopes.

Output is curled or wrinkled

Output is curled or wrinkled

Cause	Solution
Paper does not meet the specifications for this product.	Use only paper that meets the HP paper specifications for this product.
Paper is damaged or in poor condition.	Remove paper from the input tray and load paper that is in good condition.
Product is operating in an excessively humid environment.	Verify that the printing environment is within humidity specifications.
You are printing large, solid-filled areas.	Large, solid-filled areas can cause excessive curl. Try using a different pattern.
Paper used was not stored correctly and might have absorbed moisture.	Remove paper and replace it with paper from a fresh, unopened package.
Paper has poorly cut edges.	Remove paper, flex it, rotate it 180 degrees or turn it over, and then reload it into the input tray. Do not fan paper. If the problem persists, replace the paper.
The specific paper type was not configured for the tray or selected in the software.	Configure the software for the paper (see the software documentation). Configure the tray for the paper, see Load trays on page 81.
The paper has previously been used for a print job.	Do not re-use paper.

Downloaded from www.Manualslib.com manuals search engine

Product does not duplex or duplexes incorrectly

Product will not duplex (print 2-sided jobs) or duplexes incorrectly

Cause	Solution
You are trying to duplex on unsupported paper.	Verify that the paper is supported for duplex printing.
The printer driver is not set up for duplex printing.	Set up the printer driver to enable duplex printing.
The first page is printing on the back of preprinted forms or letterhead.	Load preprinted forms and letterhead in Tray 1 with the letterhead or printed side down, with the top of the page leading into the product. For Trays 2, 3, and 4, load the paper printed side up with the top of the page toward the front of the product.
The product model does not support automatic 2-sided printing.	The HP LaserJet P3011, HP LaserJet P3015, and HP LaserJet P3015n models do not support automatic 2-sided printing.
The product configuration is not set for duplexing.	In Windows, run the automatic configuration feature: 1. Click the **Start** button, point to **Settings**, and then click **Printers** (for Windows 2000) or **Printers and Faxes** (for Windows XP). 2. Right-click the HP product icon, and then click **Properties** or **Printing Preferences**. 3. Click the **Device Settings** tab. 4. Under **Installable Options**, click **Update Now** in the **Automatic Configuration** list.
Duplex printing is turned off.	1. Open each of the following menus. Press the down arrow ▼ to highlight it and then press the OK button to select it. a. **CONFIGURE DEVICE** b. **PRINTING** c. **DUPLEX** 2. Select the **ON** option.

Downloaded from www.Manualslib.com manuals search engine

Solve print-quality problems

You can prevent most print-quality problems by following these guidelines.

- Configure the trays for the correct paper-type setting. See Configure trays on page 87.
- Use paper that meets HP specifications. See Paper and print media on page 73.
- Clean the product as necessary. See Clean the paper path on page 137.

Print-quality problems associated with paper

Some print-quality problems arise from using paper that does not meet HP specifications.

- The surface of the paper is too smooth.
- The moisture content of the paper is uneven, too high, or too low. Use paper from a different source or from an unopened ream.
- Some areas of the paper reject toner. Use paper from a different source or from an unopened ream.
- The letterhead you are using is printed on rough paper. Use a smoother, xerographic paper. If this solves your problem, ask the supplier of your letterhead to use paper that meets HP specifications.
- The paper is excessively rough. Use a smoother, xerographic paper.
- The paper is too heavy for the paper-type setting that you selected, so the toner is not fusing to the paper.

For complete paper specifications for all HP LaserJet products, see the *HP LaserJet Printer Family Print Media Guide*. This guide is available at www.hp.com/support/ljpaperguide.

Print-quality problems associated with the environment

If the product is operating in excessively humid or dry conditions, verify that the printing environment is within specifications. See Operating environment on page 214.

Print-quality problems associated with jams

Make sure that all sheets are cleared from the paper path. See Jam recovery on page 176.

- If the product recently jammed, print two to three pages to clean the paper path.
- If the sheets do not pass through the fuser and cause image defects on subsequent documents, print two to three pages to clean the paper path. If the problem persists, print and process a cleaning page. See Clean the paper path on page 137.

Downloaded from www.Manualslib.com manuals search engine

Image defect examples

These examples identify the most common print-quality problems. If you still have problems after trying the suggested solutions, contact HP Customer Support.

Table 10-2 Image defect examples

Problem	Image example	Solution
Light print (partial page)		1. Make sure that the print cartridge is fully installed. 2. The print cartridge might be almost empty. Check the supplies status, and replace the print cartridge if necessary. 3. The paper might not meet HP specifications (for example, the paper is too moist or too rough). See Paper and print media on page 73.
Light print (entire page)		1. Make sure that the print cartridge is fully installed. 2. Make sure that the **ECONOMODE** setting is turned off at the control panel and in the printer driver. See EconoMode on page 92. 3. Open the **CONFIGURE DEVICE** menu at the product control panel. Open the **PRINT QUALITY** submenu and increase the **TONER DENSITY** setting. See Print Quality menu on page 23. 4. Try using a different type of paper. 5. The print cartridge might be reaching its estimated end of life. Check the supplies status, and replace the print cartridge if necessary.
Specks	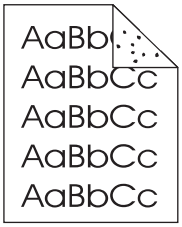	Specks might appear on a page after a jam has been cleared. 1. Print a few more pages to see if the problem corrects itself. 2. Clean the inside of the product and run a cleaning page to clean the fuser. See Clean the paper path on page 137. 3. Try using a different type of paper. 4. Check the print cartridge for leaks. If the print cartridge is leaking, replace it.
Dropouts		1. Make sure that the environmental specifications for the product are being met. See Operating environment on page 214. 2. If the paper is rough, and the toner easily rubs off, open the **CONFIGURE DEVICE** menu at the product control panel. Open the **PRINT QUALITY** submenu, select **FUSER MODES**, and then select the paper type you are using. Change the setting to **HIGH1** or **HIGH2**, which helps the toner fuse more completely onto the paper. See Print Quality menu on page 23. 3. Try using a smoother paper.
Lines	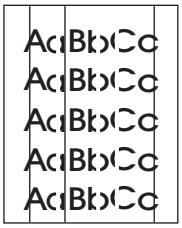	1. Print a few more pages to see if the problem corrects itself. 2. Clean the inside of the product and run a cleaning page to clean the fuser. See Clean the product on page 137. 3. Replace the print cartridge.

Downloaded from www.Manualslib.com manuals search engine

Table 10-2 Image defect examples (continued)

Problem	Image example	Solution
Gray background		1. Do not use paper that has already been run through the product. 2. Try using a different type of paper. 3. Print a few more pages to see if the problem corrects itself. 4. Turn over the paper in the tray. Also, try rotating the paper 180°. 5. Open the **CONFIGURE DEVICE** menu at the product control panel. On the **PRINT QUALITY** submenu, increase the **TONER DENSITY** setting. See Print Quality menu on page 23. 6. Make sure that the environmental specifications for the product are being met. See Operating environment on page 214. 7. The print cartridge might need to be replaced.
Toner smear	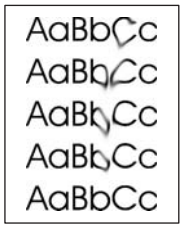	1. Print a few more pages to see if the problem corrects itself. 2. Try using a different type of paper. 3. Make sure that the environmental specifications for the product are being met. See Operating environment on page 214. 4. Clean the inside of the product and run a cleaning page to clean the fuser. See Clean the product on page 137. 5. The print cartridge might need to be replaced.
Loose toner	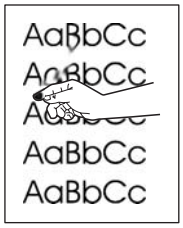	Loose toner, in this context, is defined as toner that can be rubbed off the page. 1. If paper is heavy or rough, open the **CONFIGURE DEVICE** menu at the product control panel. On the **PRINT QUALITY** submenu, select **FUSER MODES**, and then select the paper type you are using. Change the setting to **HIGH1** or **HIGH2**, which helps the toner fuse more completely onto the paper. See Print Quality menu on page 23. You must also set the type of paper for the tray you are using. See Configure trays on page 87. 2. If you have observed a rougher texture on one side of your paper, try printing on the smoother side. 3. Make sure that the environmental specifications for the product are being met. See Operating environment on page 214. 4. Make sure that the type and quality of the paper you are using meet HP specifications. See Paper and print media on page 73.
Repeat defects	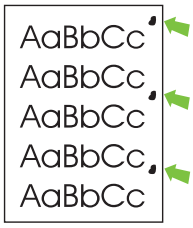	1. Print a few more pages to see if the problem corrects itself. 2. Clean the inside of the product and run a cleaning page to clean the fuser. See Clean the product on page 137. 3. The print cartridge might need to be replaced.

Downloaded from www.Manualslib.com manuals search engine

Table 10-2 Image defect examples (continued)

Problem	Image example	Solution
Repeat image	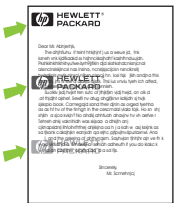	This type of defect might occur when using preprinted forms or a large quantity of narrow paper. 1. Print a few more pages to see if the problem corrects itself. 2. Make sure that the type and quality of the paper you are using meet HP specifications. See Paper and print media on page 73. 3. The print cartridge might need to be replaced. 4. Verify that the product is configured for the correct paper type.
Misformed characters	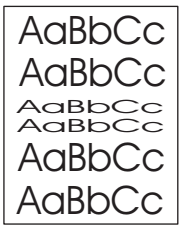	1. Print a few more pages to see if the problem corrects itself. 2. Make sure that the environmental specifications for the product are being met. See Operating environment on page 214.
Page skew	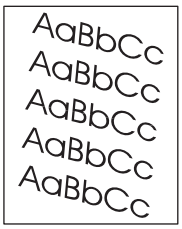	1. Print a few more pages to see if the problem corrects itself. 2. Verify that no torn pieces of paper are inside the product. 3. Make sure that paper is loaded correctly and that all adjustments have been made. See Load trays on page 81. Make sure that the guides in the tray are not too tight or too loose against the paper. 4. Turn over the paper in the tray. Also, try rotating the paper 180°. 5. Make sure that the type and quality of the paper you are using meet HP specifications. See Paper and print media on page 73. 6. Make sure that the environmental specifications for the product are being met. See Operating environment on page 214.
Curl or wave	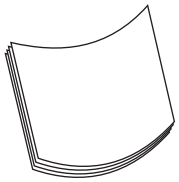	1. Turn over the paper in the tray. Also, try rotating the paper 180°. 2. Make sure that the type and quality of the paper you are using meet HP specifications. See Paper and print media on page 73. 3. Make sure that the environmental specifications for the product are being met. See Operating environment on page 214. 4. Try printing to a different output bin. 5. If paper is lightweight and smooth, open the **CONFIGURE DEVICE** menu at the product control panel. On the **PRINT QUALITY** submenu, select **FUSER MODES**, and then select the paper type you are using. Change the setting to **LOW**, which helps reduce the heat in the fusing process. See Print Quality menu on page 23. You must also set the type of paper for the tray you are using. See Configure trays on page 87.

Downloaded from www.Manualslib.com manuals search engine

Table 10-2 Image defect examples (continued)

Problem	Image example	Solution
Wrinkles or creases	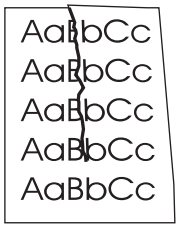	1. Print a few more pages to see if the problem corrects itself. 2. Make sure that the environmental specifications for the product are being met. See Operating environment on page 214. 3. Turn over the paper in the tray. Also, try rotating the paper 180°. 4. Make sure that paper is loaded correctly and all adjustments have been made. See Load trays on page 81. 5. Make sure that the type and quality of the paper you are using meet HP specifications. See Paper and print media on page 73. 6. If envelopes are creasing, try storing envelopes so that they lie flat. 7. If paper is lightweight and smooth, open the **CONFIGURE DEVICE** menu at the product control panel. On the **PRINT QUALITY** submenu, select **FUSER MODES**, and then select the paper type you are using. Change the setting to **LOW**, which helps reduce the heat in the fusing process. See Print Quality menu on page 23. You must also set the type of paper for the tray you are using. See Configure trays on page 87.
Vertical white lines	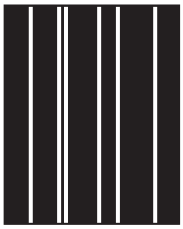	1. Print a few more pages to see if the problem corrects itself. 2. Make sure that the type and quality of the paper you are using meet HP specifications. See Paper and print media on page 73. 3. The print cartrigde might need to be replaced.
Tire tracks	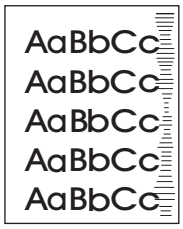	This defect typically occurs when the print cartridge has far exceeded its estimated life. For example, if you are printing a very large quantity of pages with very little toner coverage. 1. The print cartrigde might need to be replaced. 2. Reduce the number of pages that you print with very low toner coverage.
White spots on black	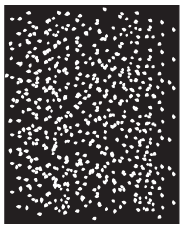	1. Print a few more pages to see if the problem corrects itself. 2. Make sure that the type and quality of the paper you are using meet HP specifications. See Paper and print media on page 73. 3. Make sure that the environmental specifications for the product are being met. See Operating environment on page 214. 4. The print cartrigde might need to be replaced.

Downloaded from www.Manualslib.com manuals search engine

Table 10-2 Image defect examples (continued)

Problem	Image example	Solution
Scattered lines	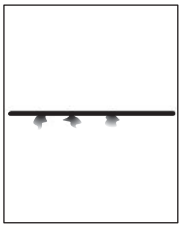	1. Make sure that the type and quality of the paper you are using meet HP specifications. See Paper and print media on page 73. 2. Make sure that the environmental specifications for the product are being met. See Operating environment on page 214. 3. Turn over the paper in the tray. Also, try rotating the paper 180°. 4. Open the **CONFIGURE DEVICE** menu at the product control panel. Open the **PRINT QUALITY** submenu and change the **TONER DENSITY** setting. See Print Quality menu on page 23. 5. Open the **CONFIGURE DEVICE** menu at the product control panel. On the **PRINT QUALITY** submenu, open **OPTIMIZE** and set **LINE DETAIL=ON**.
Blurred print		1. Make sure that the type and quality of the paper you are using meet HP specifications. See Paper and print media on page 73. 2. Make sure that the environmental specifications for the product are being met. See Operating environment on page 214. 3. Turn over the paper in the tray. Also, try rotating the paper 180°. 4. Do not use paper that already has been run through the product. 5. Decrease the toner density. Open the **CONFIGURE DEVICE** menu at the product control panel. Open the **PRINT QUALITY** submenu and change the **TONER DENSITY** setting. See Print Quality menu on page 23. 6. Open the **CONFIGURE DEVICE** menu at the product control panel. On the **PRINT QUALITY** submenu, open **OPTIMIZE** and set **HIGH TRANSFER=ON**. See Print Quality menu on page 23.
Random image repetition	 	If an image that appears at the top of the page (in solid black) repeats further down the page (in a gray field), the toner might not have been completely erased from the last job. (The repeated image might be lighter or darker than the field it appears in.) • Change the tone (darkness) of the field that the repeated image appears in. • Change the order in which the images are printed. For example, have the lighter image at the top of the page, and the darker image farther down the page. • From your software program, rotate the whole page 180° to print the lighter image first. • If the defect occurs later in a print job, turn the product off for 10 minutes, and then turn it on to restart the print job.

Downloaded from www.Manualslib.com manuals search engine

Repetitive defects ruler

If defects repeat at regular intervals on the page, use this ruler to identify the cause of the defect. Place the top of the ruler at the first defect. The marking that is beside the next occurrence of the defect indicates which component needs to be replaced.

Figure 10-1 Repetitive defects ruler

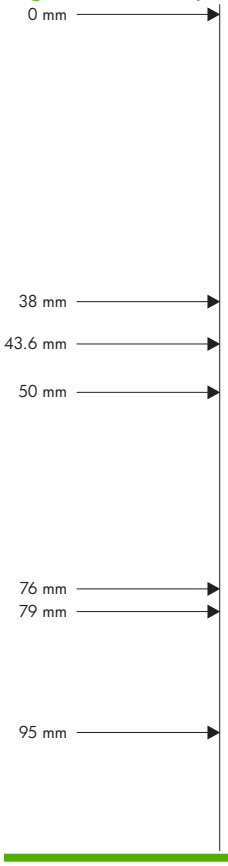

Distance between defects	Product components that cause the defect
38 mm	Print cartridge
43.6 mm	Print engine
50 mm	Print cartridge
76 mm	Fuser
79 mm	Fuser
95 mm	Print cartridge

Downloaded from www.Manualslib.com manuals search engine

Solve performance problems

Problem	Cause	Solution
Pages print but are totally blank.	The document might contain blank pages.	Check the document that you are printing to see if content appears on all of the pages.
	The product might be malfunctioning.	To check the product, print a Configuration page.
Pages print very slowly.	Heavier paper types can slow the print job.	Print on a different type of paper.
	Complex pages can print slowly.	Proper fusing may require a slower print speed to ensure the best print quality.
Pages did not print.	The product might not be pulling paper correctly.	Make sure paper is loaded in the tray correctly.
	The paper is jamming in the product.	Clear the jam. See Jams on page 162.
	The USB cable might be defective or incorrectly connected.	• Disconnect the USB cable at both ends and reconnect it. • Try printing a job that has printed in the past. • Try using a different USB cable.
	Other devices are running on your computer.	The product might not share a USB port. If you have an external hard drive or network switchbox that is connected to the same port as the product, the other device might be interfering. To connect and use the product, you must disconnect the other device or you must use two USB ports on the computer.

Downloaded from www.Manualslib.com manuals search engine

Solve connectivity problems

Solve direct-connect problems

If you have connected the product directly to a computer, check the cable.

- Verify that the cable is connected to the computer and to the product.
- Verify that the cable is not longer than 2 meters (6 feet). Replace the cable if necessary.
- Verify that the cable is working correctly by connecting it to another product. Replace the cable if necessary.

Solve network problems

Check the following items to verify that the product is communicating with the network. Before beginning, print a configuration page. See Print the information and show-me-how pages on page 108.

Problem	Solution
Poor physical connection	Verify that the product is attached to the correct network port using a cable of the correct length. Verify that cable connections are secure. Look at the network port connection on the back of the product, and verify that the amber activity light and the green link-status light are lit. If the problem continues, try a different cable or port on the hub.
The computer is unable to communicate with the product.	Use the command prompt to ping the product from your computer. For example: `ping 192.168.45.39` Verify that the ping displays round-trip times, which indicates that it is working. If the ping command failed, verify that the network hubs are on, and then verify that the network settings, the product, and the computer are all configured for the same network.
Incorrect link and duplex settings	Hewlett-Packard recommends leaving this setting in automatic mode (the default setting). See Link speed and duplex settings on page 71.
Incorrect IP address for the product on the computer	Use the correct IP address. If the IP address is correct, delete the product and then it add again.
New software programs have caused compatibility problems.	Verify that any new software programs are correctly installed and that they use the correct printer driver.
Your computer or workstation is set up incorrectly.	Check the network drivers, printer drivers, and the network redirection. Verify that the operating system is configured correctly.
The protocol is disabled, or other network settings are incorrect.	Print a configuration page to check the status of the protocol. Enable it if necessary. Use the control panel to reconfigure the network settings if necessary.

Downloaded from www.Manualslib.com manuals search engine

Solve walk-up USB printing problems

Problem	Cause	Solution
The **USB STORAGE** menu does not open when you insert the USB accessory.	The product does not support this type of USB storage accessory or file system.	Save the files on a standard USB storage accessory that uses File Allocation Table (FAT) file systems. The product supports FAT12, FAT16, and FAT32 USB storage accessories.
	The administrator might have disabled USB printing for this product.	Print the job from a computer that is connected to the product.
	Too many USB storage accessories are connected to the product.	Remove USB storage accessories until the message goes away, and then remove and reinsert the USB storage accessory from which you want to print. This product supports up to four USB storage accessories.
	Another menu is already open.	Close the open menu, and then reinsert the USB storage accessory.
	More than 1 minute has passed since you inserted the USB storage accessory.	The menu stays open for 1 minute. Reinsert the USB storage accessory.
	The USB storage accessory has multiple partitions. (Some USB storage accessory manufacturers install software on the accessory that creates partitions, similar to a CD.)	Reformat the USB storage accessory to remove the partitions, or use a different USB storage accessory.
	The USB storage accessory requires too much power.	1. Remove the USB storage accessory. 2. Turn the product off and then on. 3. Use a USB storage accessory that has its own power supply or that requires less power.
	The USB storage accessory is not functioning correctly.	1. Remove the USB storage accessory. 2. Turn the product off and then on. 3. Try printing from another USB storage accessory.
The file does not print.	You are printing a .PDF file, and the **RAM DISK** feature is off.	Open the **SYSTEM SETUP** menu, and set the **RAM DISK** feature to the **AUTO** setting.
	Another print job might be processing, or you are printing a large file.	Check the Data light on the control panel. If it is blinking, the product is processing the job.
	The trays might be empty.	Make sure paper is in at least one tray.
	The product might have a paper jam.	Check the control-panel display for error messages. Clear the jam. See Clear jams on page 163.

Downloaded from www.Manualslib.com manuals search engine

Problem	Cause	Solution
Unexpected files are on the USB accessory.	Each time you turn it on, the product automatically creates three files on attached USB accessories.	Remove the USB accessory before you turn on the product. Some USB accessories have a lock feature that prevents new files from being written to the accessory. If your USB accessory has this feature, lock the accessory.
The file is not listed in the **USB STORAGE** menu.	The USB printing feature does not support the type of file you are printing.	You can print the following types of files: ● .PDF ● .PCL ● .PS
	Too many files are in a single folder on the USB accessory.	Reduce the number of files in the folder by moving them to subfolders.
	The product does not support the language of the file name, and it has replaced the file name with characters from a different character set.	Rename the files in a supported language.
The **USB STORAGE** menu opens, but the USB accessory is not listed.	Too many USB accessories are connected to the product.	Remove USB accessories until the message goes away, and then remove and reinsert the USB accessory from which you want to print. This product supports up to four USB accessories.
File names are blurry or hard to read when scrolling through the list on the control panel.	The control-panel display brightness needs adjustment.	Open the **SYSTEM SETUP** menu, and adjust the **DISPLAY BRIGHTNESS** setting until the text is clear.

Downloaded from www.Manualslib.com manuals search engine

Product software problems

Problem	Solution
A printer driver for the product is not visible in the **Printer** folder	• Reinstall the product software. **NOTE:** Close any applications that are running. To close an application that has an icon in the system tray, right-click the icon, and select **Close** or **Disable**. • Try plugging the USB cable into a different USB port on the computer.
An error message was displayed during the software installation	• Reinstall the product software. **NOTE:** Close any applications that are running. To close an application that has an icon in the task bar, right-click the icon, and select **Close** or **Disable**. • Check the amount of free space on the drive where you are installing the product software. If necessary, free up as much space as you can, and reinstall the product software. • If necessary, run the Disk Defragmenter, and reinstall the product software.
The product is in Ready mode, but nothing prints	• Print a Configuration page, and verify the product functionality. • Verify that all of the cables are correctly seated and within specifications. This includes the USB and power cables. Try a new cable.

Downloaded from www.Manualslib.com manuals search engine

Solve common Windows problems

Error message:

"General Protection FaultException OE"

"Spool32"

"Illegal Operation"

Cause	Solution
	Close all software programs, restart Windows, and try again. Select a different printer driver. If the product PCL 6 printer driver is selected, switch to the PCL 5 or HP postscript level 3 emulation printer driver, which can be done from a software program. Delete all temp files from the Temp subdirectory. Determine the name of the directory by opening the AUTOEXEC.BAT file and looking for the statement "Set Temp =". The name after this statement is the Temp directory. It is usually C:\TEMP by default, but can be redefined. See the Microsoft Windows documentation that came with the computer for more information about Windows error messages.

Downloaded from www.Manualslib.com manuals search engine

Solve common Macintosh problems

Table 10-3 Problems with Mac OS X

The printer driver is not listed in the Print Center or Printer Setup Utility.

Cause	Solution
The product software might not have been installed or was installed incorrectly.	Make sure that the product .GZ file is in the following hard-drive folder: • **Mac OS X V10.3 and V10.4:** `Library/Printers/PPDs/Contents/Resources/<lang>.lproj`, where <lang> is the two-letter language code for the language that you are using. • **Mac OS X V10.5:** `Library/Printers/PPDs/Contents/Resources` If necessary, reinstall the software. See the getting started guide for instructions.
The Postscript Printer Description (PPD) file is corrupt.	Delete the .GZ file from the following hard-drive folder: • **Mac OS X V10.3 and V10.4:** `Library/Printers/PPDs/Contents/Resources/<lang>.lproj`, where <lang> is the two-letter language code for the language that you are using. • **Mac OS X V10.5:** `Library/Printers/PPDs/Contents/Resources` Reinstall the software. See the getting started guide for instructions.

The product name, IP address, or Rendezvous/Bonjour host name does not appear in the product list in the Print Center or Printer Setup Utility.

Cause	Solution
The product might not be ready.	Make sure that the cables are connected correctly, the product is on, and the Ready light is on. If you are connecting through a USB or Ethernet hub, try connecting directly to the computer or use a different port.
The wrong connection type might be selected.	Make sure that USB, IP Printing, or Rendezvous/Bonjour is selected, depending on the type of connection that exists between the product and the computer.
The wrong product name, IP address, or Rendezvous/Bonjour host name is being used.	Print a configuration page to check the product name, IP address, or Rendezvous host name. Verify that the name, IP address, or Rendezvous host name on the configuration page matches the product name, IP address, or Rendezvous host name in the Print Center or Printer Setup Utility.
The interface cable might be defective or of poor quality.	Replace the cable with a high-quality cable.

The printer driver does not automatically set up your selected product in the Print Center or Printer Setup Utility.

Cause	Solution
The product might not be ready.	Make sure that the cables are connected correctly, the product is on, and the Ready light is on. If you are connecting through a USB or Ethernet hub, try connecting directly to the computer or use a different port.

Downloaded from www.Manualslib.com manuals search engine

Table 10-3 Problems with Mac OS X (continued)

The printer driver does not automatically set up your selected product in the Print Center or Printer Setup Utility.

Cause	Solution
The product software might not have been installed or was installed incorrectly.	Make sure that the product PPD is in the following hard-drive folder: • **Mac OS X V10.3 and V10.4:** `Library/Printers/PPDs/Contents/Resources/<lang>.lproj`, where <lang> is the two-letter language code for the language that you are using. • **Mac OS X V10.5:** `Library/Printers/PPDs/Contents/Resources` If necessary, reinstall the software. See the getting started guide for instructions.
The Postscript Printer Description (PPD) file is corrupt.	Delete the .GZ file from the following hard-drive folder: • **Mac OS X V10.3 and V10.4:** `Library/Printers/PPDs/Contents/Resources/<lang>.lproj`, where <lang> is the two-letter language code for the language that you are using. • **Mac OS X V10.5:** `Library/Printers/PPDs/Contents/Resources` Reinstall the software. See the getting started guide for instructions.
The interface cable might be defective or of poor quality.	Replace the interface cable with a high-quality cable.

A print job was not sent to the product that you wanted.

Cause	Solution
The print queue might be stopped.	Restart the print queue. Open **print monitor** and select **Start Jobs**.
The wrong product name or IP address is being used. Another product with the same or similar name, IP address, or Rendezvous host name might have received your print job.	Print a configuration page to check the product name, IP address, or Rendezvous host name. Verify that the name, IP address, or Rendezvous host name on the configuration page matches the product name, IP address, or Rendezvous host name in the Print Center or Printer Setup Utility.

An encapsulated PostScript (EPS) file does not print with the correct fonts.

Cause	Solution
This problem occurs with some programs.	• Try downloading the fonts that are contained in the EPS file to the product before printing. • Send the file in ASCII format instead of binary encoding.

You are unable to print from a third-party USB card.

Cause	Solution
This error occurs when the software for USB products is not installed.	When adding a third-party USB card, you might need the Apple USB Adapter Card Support software. The most current version of this software is available from the Apple Web site.

Downloaded from www.Manualslib.com manuals search engine

Table 10-3 Problems with Mac OS X (continued)

When connected with a USB cable, the product does not appear in the Print Center or Printer Setup Utility after the driver is selected.

Cause	Solution
This problem is caused by either a software or a hardware component.	**Software troubleshooting** • Check that your Macintosh supports USB. • Verify that your Macintosh operating system is Mac OS X v10.3 or later. • Ensure that your Macintosh has the appropriate USB software from Apple. **Hardware troubleshooting** • Check that the product is turned on. • Verify that the USB cable is connected correctly. • Check that you are using the appropriate high-speed USB cable. • Ensure that you do not have too many USB devices drawing power from the chain. Disconnect all of the devices from the chain, and connect the cable directly to the USB port on the host computer. • Check to see if more than two nonpowered USB hubs are connected in a row on the chain. Disconnect all of the devices from the chain and connect the cable directly to the USB port on the host computer. **NOTE:** The iMac keyboard is a nonpowered USB hub.

Downloaded from www.Manualslib.com manuals search engine

Downloaded from www.Manualslib.com manuals search engine

A Supplies and accessories

- Order parts, accessories, and supplies
- Part numbers

Downloaded from www.Manualslib.com manuals search engine

Order parts, accessories, and supplies

Order supplies and paper	www.hp.com/go/suresupply
Order genuine HP parts or accessories	www.hp.com/buy/parts
Order through service or support providers	Contact an HP-authorized service or support provider.
Order using HP software	Use the HP Easy Printer Care software on page 110 Use the embedded Web server on page 113

Downloaded from www.Manualslib.com manuals search engine

Part numbers

The following list of accessories was current at the time of printing. Ordering information and availability of the accessories might change during the life of the product

Paper-handling accessories

Item	Description	Part number
Optional 500-sheet tray and feeder unit	Optional tray to increase paper capacity. The product can accommodate up to two optional 500-sheet feeders.	CE530A

Print cartridges

Item	Description	Part number
HP LaserJet print cartridge	Standard-capacity cartridge	CE255A
	High-capacity cartridge	CE255X

Memory

Item	Description	Part number
144 x 32-pin DDR2 memory DIMM (dual inline memory module) Boosts the ability of the product to handle large or complex print jobs.	64 MB	CC413A
	128 MB	CC414A
	256 MB	CC415A
	512 MB	CE483A
	1 GB	CE285A
HP Encrypted High Performance hard disk	Encrypted hard disk to install in the EIO accessory slot 63 mm (2.5 in)	J8019A

Downloaded from www.Manualslib.com manuals search engine

Cables and interfaces

Item	Description	Part number
Enhanced I/O (EIO) cards	HP High Performance Serial ATA EIO Hard Disk	J6073G
HP Jetdirect print server multi-protocol EIO network cards:	1284B parallel adaptor	J7972G
	Jetdirect EIO wireless 690n (IPv6/IPsec)	J8007G
	Jetdirect en3700	J7942G
	Jetdirect en1700	J7988G
	Jetdirect ew2400 USB wireless print server	J7951G
	Jetdirect 630n EIO networking card (IPv6/gigabit)	J7997G
	Jetdirect 635n EIO networking card (IPv6/IPsec)	J7961G
USB cable	2-meter A-to-B cable	C6518A

Downloaded from www.Manualslib.com manuals search engine

B Service and support

- Hewlett-Packard limited warranty statement
- HP's Premium Protection Warranty: LaserJet print cartridge limited warranty statement
- End User License Agreement
- Customer self-repair warranty service
- Customer support
- Repack the product
- Service information form

Downloaded from www.Manualslib.com manuals search engine

Hewlett-Packard limited warranty statement

HP PRODUCT	DURATION OF LIMITED WARRANTY
HP LaserJet P3015, P3015d, P3015n, CP3015dn, CP3015x	One-year limited warranty

HP warrants to you, the end-user customer, that HP hardware and accessories will be free from defects in materials and workmanship after the date of purchase, for the period specified above. If HP receives notice of such defects during the warranty period, HP will, at its option, either repair or replace products which prove to be defective. Replacement products may be either new or equivalent in performance to new.

HP warrants to you that HP software will not fail to execute its programming instructions after the date of purchase, for the period specified above, due to defects in material and workmanship when properly installed and used. If HP receives notice of such defects during the warranty period, HP will replace software which does not execute its programming instructions due to such defects.

HP does not warrant that the operation of HP products will be uninterrupted or error free. If HP is unable, within a reasonable time, to repair or replace any product to a condition as warranted, you will be entitled to a refund of the purchase price upon prompt return of the product.

HP products may contain remanufactured parts equivalent to new in performance or may have been subject to incidental use.

Warranty does not apply to defects resulting from (a) improper or inadequate maintenance or calibration, (b) software, interfacing, parts or supplies not supplied by HP, (c) unauthorized modification or misuse, (d) operation outside of the published environmental specifications for the product, or (e) improper site preparation or maintenance.

TO THE EXTENT ALLOWED BY LOCAL LAW, THE ABOVE WARRANTIES ARE EXCLUSIVE AND NO OTHER WARRANTY OR CONDITION, WHETHER WRITTEN OR ORAL, IS EXPRESSED OR IMPLIED AND HP SPECIFICALLY DISCLAIMS ANY IMPLIED WARRANTIES OR CONDITIONS OF MERCHANTABILITY, SATISFACTORY QUALITY, AND FITNESS FOR A PARTICULAR PURPOSE. Some countries/regions, states or provinces do not allow limitations on the duration of an implied warranty, so the above limitation or exclusion might not apply to you. This warranty gives you specific legal rights and you might also have other rights that vary from country/region to country/region, state to state, or province to province.

HP's limited warranty is valid in any country/region or locality where HP has a support presence for this product and where HP has marketed this product. The level of warranty service you receive may vary according to local standards. HP will not alter form, fit or function of the product to make it operate in a country/region for which it was never intended to function for legal or regulatory reasons.

TO THE EXTENT ALLOWED BY LOCAL LAW, THE REMEDIES IN THIS WARRANTY STATEMENT ARE YOUR SOLE AND EXCLUSIVE REMEDIES. EXCEPT AS INDICATED ABOVE, IN NO EVENT WILL HP OR ITS SUPPLIERS BE LIABLE FOR LOSS OF DATA OR FOR DIRECT, SPECIAL, INCIDENTAL, CONSEQUENTIAL (INCLUDING LOST PROFIT OR DATA), OR OTHER DAMAGE, WHETHER BASED IN CONTRACT, TORT, OR OTHERWISE. Some countries/regions, states or provinces do not allow the exclusion or limitation of incidental or consequential damages, so the above limitation or exclusion may not apply to you.

THE WARRANTY TERMS CONTAINED IN THIS STATEMENT, EXCEPT TO THE EXTENT LAWFULLY PERMITTED, DO NOT EXCLUDE, RESTRICT OR MODIFY AND ARE IN ADDITION TO THE MANDATORY STATUTORY RIGHTS APPLICABLE TO THE SALE OF THIS PRODUCT TO YOU.

Downloaded from www.Manualslib.com manuals search engine

HP's Premium Protection Warranty: LaserJet print cartridge limited warranty statement

This HP product is warranted to be free from defects in materials and workmanship.

This warranty does not apply to products that (a) have been refilled, refurbished, remanufactured or tampered with in any way, (b) experience problems resulting from misuse, improper storage, or operation outside of the published environmental specifications for the printer product or (c) exhibit wear from ordinary use.

To obtain warranty service, please return the product to place of purchase (with a written description of the problem and print samples) or contact HP customer support. At HP's option, HP will either replace products that prove to be defective or refund your purchase price.

TO THE EXTENT ALLOWED BY LOCAL LAW, THE ABOVE WARRANTY IS EXCLUSIVE AND NO OTHER WARRANTY OR CONDITION, WHETHER WRITTEN OR ORAL, IS EXPRESSED OR IMPLIED AND HP SPECIFICALLY DISCLAIMS ANY IMPLIED WARRANTIES OR CONDITIONS OF MERCHANTABILITY, SATISFACTORY QUALITY, AND FITNESS FOR A PARTICULAR PURPOSE.

TO THE EXTENT ALLOWED BY LOCAL LAW, IN NO EVENT WILL HP OR ITS SUPPLIERS BE LIABLE FOR DIRECT, SPECIAL, INCIDENTAL, CONSEQUENTIAL (INCLUDING LOST PROFIT OR DATA), OR OTHER DAMAGE, WHETHER BASED IN CONTRACT, TORT, OR OTHERWISE.

THE WARRANTY TERMS CONTAINED IN THIS STATEMENT, EXCEPT TO THE EXTENT LAWFULLY PERMITTED, DO NOT EXCLUDE, RESTRICT OR MODIFY AND ARE IN ADDITION TO THE MANDATORY STATUTORY RIGHTS APPLICABLE TO THE SALE OF THIS PRODUCT TO YOU.

Downloaded from www.Manualslib.com manuals search engine

End User License Agreement

PLEASE READ CAREFULLY BEFORE USING THIS SOFTWARE PRODUCT: This End-User License Agreement ("EULA") is a contract between (a) you (either an individual or the entity you represent) and (b) Hewlett-Packard Company ("HP") that governs your use of the software product ("Software"). This EULA does not apply if there is a separate license agreement between you and HP or its suppliers for the Software, including a license agreement in online documentation. The term "Software" may include (i) associated media, (ii) a user guide and other printed materials, and (iii) "online" or electronic documentation (collectively "User Documentation").

RIGHTS IN THE SOFTWARE ARE OFFERED ONLY ON THE CONDITION THAT YOU AGREE TO ALL TERMS AND CONDITIONS OF THIS EULA. BY INSTALLING, COPYING, DOWNLOADING, OR OTHERWISE USING THE SOFTWARE, YOU AGREE TO BE BOUND BY THIS EULA. IF YOU DO NOT ACCEPT THIS EULA, DO NOT INSTALL, DOWNLOAD, OR OTHERWISE USE THE SOFTWARE. IF YOU PURCHASED THE SOFTWARE BUT DO NOT AGREE TO THIS EULA, PLEASE RETURN THE SOFTWARE TO YOUR PLACE OF PURCHASE WITHIN FOURTEEN DAYS FOR A REFUND OF THE PURCHASE PRICE; IF THE SOFTWARE IS INSTALLED ON OR MADE AVAILABLE WITH ANOTHER HP PRODUCT, YOU MAY RETURN THE ENTIRE UNUSED PRODUCT.

1. THIRD PARTY SOFTWARE. The Software may include, in addition to HP proprietary software ("HP Software"), software under licenses from third parties ("Third Party Software" and "Third Party License"). Any Third Party Software is licensed to you subject to the terms and conditions of the corresponding Third Party License. Generally, the Third Party License is located in a file such as license.txt; you should contact HP support if you cannot find any Third Party License. If the Third Party Licenses include licenses that provide for the availability of source code (such as the GNU General Public License) and the corresponding source code is not included with the Software, then check the product support pages of HP's website (hp.com) to learn how to obtain such source code.

2. LICENSE RIGHTS. You will have the following rights provided you comply with all terms and conditions of this EULA:

a. Use. HP grants you a license to Use one copy of the HP Software. "Use" means installing, copying, storing, loading, executing, displaying, or otherwise using the HP Software. You may not modify the HP Software or disable any licensing or control feature of the HP Software. If this Software is provided by HP for Use with an imaging or printing product (for example, if the Software is a printer driver, firmware, or add-on), the HP Software may only be used with such product ("HP Product"). Additional restrictions on Use may appear in the User Documentation. You may not separate component parts of the HP Software for Use. You do not have the right to distribute the HP Software.

b. Copying. Your right to copy means you may make archival or back-up copies of the HP Software, provided each copy contains all the original HP Software's proprietary notices and is used only for back-up purposes.

3. UPGRADES. To Use HP Software provided by HP as an upgrade, update, or supplement (collectively "Upgrade"), you must first be licensed for the original HP Software identified by HP as eligible for the Upgrade. To the extent the Upgrade supersedes the original HP Software, you may no longer use such HP Software. This EULA applies to each Upgrade unless HP provides other terms with the Upgrade. In case of a conflict between this EULA and such other terms, the other terms will prevail.

4. TRANSFER.

a. Third Party Transfer. The initial end user of the HP Software may make a one-time transfer of the HP Software to another end user. Any transfer will include all component parts, media, User Documentation, this EULA, and if applicable, the Certificate of Authenticity. The transfer may not be an indirect transfer, such as a consignment. Prior to the transfer, the end user receiving the transferred

Downloaded from www.Manualslib.com manuals search engine

Software will agree to this EULA. Upon transfer of the HP Software, your license is automatically terminated.

b. Restrictions. You may not rent, lease or lend the HP Software or Use the HP Software for commercial timesharing or bureau use. You may not sublicense, assign or otherwise transfer the HP Software except as expressly provided in this EULA.

5. PROPRIETARY RIGHTS. All intellectual property rights in the Software and User Documentation are owned by HP or its suppliers and are protected by law, including applicable copyright, trade secret, patent, and trademark laws. You will not remove any product identification, copyright notice, or proprietary restriction from the Software.

6. LIMITATION ON REVERSE ENGINEERING. You may not reverse engineer, decompile, or disassemble the HP Software, except and only to the extent that the right to do so is allowed under applicable law.

7. CONSENT TO USE OF DATA. HP and its affiliates may collect and use technical information you provide in relation to (i) your Use of the Software or the HP Product, or (ii) the provision of support services related to the Software or the HP Product. All such information will be subject to HP's privacy policy. HP will not use such information in a form that personally identifies you except to the extent necessary to enhance your Use or provide support services.

8. LIMITATION OF LIABILITY. Notwithstanding any damages that you might incur, the entire liability of HP and its suppliers under this EULA and your exclusive remedy under this EULA will be limited to the greater of the amount actually paid by you for the Product or U.S. $5.00. TO THE MAXIMUM EXTENT PERMITTED BY APPLICABLE LAW, IN NO EVENT WILL HP OR ITS SUPPLIERS BE LIABLE FOR ANY SPECIAL, INCIDENTAL, INDIRECT, OR CONSEQUENTIAL DAMAGES (INCLUDING DAMAGES FOR LOST PROFITS, LOST DATA, BUSINESS INTERRUPTION, PERSONAL INJURY, OR LOSS OF PRIVACY) RELATED IN ANY WAY TO THE USE OF OR INABILITY TO USE THE SOFTWARE, EVEN IF HP OR ANY SUPPLIER HAS BEEN ADVISED OF THE POSSIBILITY OF SUCH DAMAGES AND EVEN IF THE ABOVE REMEDY FAILS OF ITS ESSENTIAL PURPOSE. Some states or other jurisdictions do not allow the exclusion or limitation of incidental or consequential damages, so the above limitation or exclusion may not apply to you.

9. U.S. GOVERNMENT CUSTOMERS. If you are a U.S. Government entity, then consistent with FAR 12.211 and FAR 12.212, Commercial Computer Software, Computer Software Documentation, and Technical Data for Commercial Items are licensed under the applicable HP commercial license agreement.

10. COMPLIANCE WITH EXPORT LAWS. You will comply with all laws, rules, and regulations (i) applicable to the export or import of the Software, or (ii) restricting the Use of the Software, including any restrictions on nuclear, chemical, or biological weapons proliferation.

11. RESERVATION OF RIGHTS. HP and its suppliers reserve all rights not expressly granted to you in this EULA.

(c) 2007 Hewlett-Packard Development Company, L.P.

Rev. 11/06

Downloaded from www.Manualslib.com manuals search engine

Customer self-repair warranty service

HP products are designed with many Customer Self Repair (CSR) parts to minimize repair time and allow for greater flexibility in performing defective parts replacement. If during the diagnosis period, HP identifies that the repair can be accomplished by the use of a CSR part, HP will ship that part directly to you for replacement. There are two categories of CSR parts: 1) Parts for which customer self repair is mandatory. If you request HP to replace these parts, you will be charged for the travel and labor costs of this service. 2) Parts for which customer self repair is optional. These parts are also designed for Customer Self Repair. If, however, you require that HP replace them for you, this may be done at no additional charge under the type of warranty service designated for your product.

Based on availability and where geography permits, CSR parts will be shipped for next business day delivery. Same-day or four-hour delivery may be offered at an additional charge where geography permits. If assistance is required, you can call the HP Technical Support Center and a technician will help you over the phone. HP specifies in the materials shipped with a replacement CSR part whether a defective part must be returned to HP. In cases where it is required to return the defective part to HP, you must ship the defective part back to HP within a defined period of time, normally five (5) business days. The defective part must be returned with the associated documentation in the provided shipping material. Failure to return the defective part may result in HP billing you for the replacement. With a customer self repair, HP will pay all shipping and part return costs and determine the courier/carrier to be used.

Downloaded from www.Manualslib.com manuals search engine

Customer support

Get telephone support, free during your warranty period, for your country/region Have the product name, serial number, date of purchase, and problem description ready.	Country/region phone numbers are on the flyer that was in the box with your product or at www.hp.com/support/.
Get 24-hour Internet support	www.hp.com/support/ljp3010series
Get support for products used with a Macintosh computer	www.hp.com/go/macosx
Download software utilities, drivers, and electronic information	www.hp.com/go/ljp3010series_software
Order additional HP service or maintenance agreements	www.hp.com/go/carepack

Downloaded from www.Manualslib.com manuals search engine

Repack the product

If HP Customer Care determines that your product needs to be returned to HP for repair, follow these steps to repack the product before shipping it.

△ **CAUTION:** Shipping damage as a result of inadequate packing is the customer's responsibility.

1. Remove and retain any DIMMs cards that you have purchased and installed in the product.

   △ **CAUTION:** Static electricity can damage electronic parts. When handling DIMMs, either wear an antistatic wrist strap, or frequently touch the surface of the DIMM antistatic package and then touch bare metal on the product. To remove the DIMMs, see Install memory on page 126.

2. Remove and retain the print cartridge.

   △ **CAUTION:** It is *extremely important* to remove the print cartridge before shipping the product. A print cartridge that remains in the product during shipping can leak and cover the product engine and other parts with toner.

   To prevent damage to the print cartridge, avoid touching the roller on it, and store the print cartridge in its original packing material or so that it is not exposed to light.

3. Remove and retain the power cable, interface cable, and optional accessories, such as an EIO card.

4. If possible, include print samples and 50 to 100 sheets of paper or other print media that did not print correctly.

5. In the U.S., call HP Customer Care to request new packing material. In other areas, use the original packing material, if possible. Hewlett-Packard recommends insuring the equipment for shipment.

Downloaded from www.Manualslib.com manuals search engine

Service information form

WHO IS RETURNING THE EQUIPMENT?		Date:
Person to contact:		Phone:
Alternate contact:		Phone:
Return shipping address:	Special shipping instructions:	
WHAT ARE YOU SENDING?		
Model name:	Model number:	Serial number:
Please attach any relevant printouts. Do NOT ship accessories (manuals, cleaning supplies, and so on) that are not required to complete the repair.		
HAVE YOU REMOVED THE PRINT CARTRIDGES?		
You must remove them before shipping the printer, unless a mechanical problem prevents you from doing so.		
[ ] Yes.	[ ] No, I cannot remove them.	
WHAT NEEDS TO BE DONE? (Attach a separate sheet if necessary.)		
1. Describe the conditions of the failure. (What was the failure? What were you doing when the failure occurred? What software were you running? Is the failure repeatable?)		
2. If the failure is intermittent, how much time elapses between failures?		
3. If the unit connected to any of the following, give the manufacturer and model number.		
Personal computer:	Modem:	Network:
4. Additional comments:		
HOW WILL YOU PAY FOR THE REPAIR?		
[ ] Under warranty	Purchase/received date:	
(Attach proof of purchase or receiving document with original received date.)		
[ ] Maintenance contract number:		
[ ] Purchase order number:		
Except for contract and warranty service, a purchase order number and/or authorized signature must accompany any request for service. If standard repair prices do not apply, a minimum purchase order is required. Standard repair prices can be obtained by contacting an HP-authorized repair center.		
Authorized signature:		Phone:
Billing address:	Special billing instructions:	

Downloaded from www.Manualslib.com manuals search engine

Downloaded from www.Manualslib.com manuals search engine

C Specifications

- Physical specifications
- Power consumption, electrical specifications, and acoustic emissions
- Operating environment

Downloaded from www.Manualslib.com manuals search engine

Physical specifications

Table C-1 Product dimensions and weights

Product model	Height	Depth	Width	Weight
Base, d, n, and dn models	316 mm (12.4 in)	400 mm (15.7x in)	448 mm (17.6 in)	15.9 kg (35.1 lb)
x model	456 mm (17.9 in)	400 mm (15.7 in)	448 mm (17.6 in)	21.2 kg (46.8 lb)
Optional 500-sheet feeder	140 mm (5.5 in)	400 mm (15.7 in)	448 mm (17.6 in)	5.3 kg (11.7 lb)

Table C-2 Product dimensions with all doors and trays fully opened

Product model	Height	Depth	Width
Base, d, n, and dn models	325 mm (12.8 in)	1040 mm (41.0 in)	448 mm (17.6 in)
x model	465 mm (18.3 in)	1040 mm (41.0 in)	448 mm (17.6 in)

Power consumption, electrical specifications, and acoustic emissions

See www.hp.com/go/ljp3010series_regulatory for current information.

Operating environment

Table C-3 Necessary conditions

Environmental condition		Printing	Storage/standby
Temperature	Product	7.5° to 32.5°C (45.5° to 90.5°)	0° to 35°C (32° to 95°F)
	Print cartridge	7.5° to 32.5°C (45.5° to 90.5°)	-20° to 40°C (-4° to 104°F)
Relative humidity	Product	5% to 90%	35% to 85%
	Print cartridge	10–90%	10–90%

Downloaded from www.Manualslib.com manuals search engine

D Regulatory information

- FCC regulations
- Environmental product stewardship program
- Declaration of conformity
- Safety statements

Downloaded from www.Manualslib.com manuals search engine

FCC regulations

This equipment has been tested and found to comply with the limits for a Class B digital device, pursuant to Part 15 of the FCC rules. These limits are designed to provide reasonable protection against harmful interference in a residential installation. This equipment generates, uses, and can radiate radio frequency energy. If this equipment is not installed and used in accordance with the instructions, it may cause harmful interference to radio communications. However, there is no guarantee that interference will not occur in a particular installation. If this equipment does cause harmful interference to radio or television reception, which can be determined by turning the equipment off and on, the user is encouraged to try to correct the interference by one or more of the following measures:

- Reorient or relocate the receiving antenna.
- Increase separation between equipment and receiver.
- Connect equipment to an outlet on a circuit different from that to which the receiver is located.
- Consult your dealer or an experienced radio/TV technician.

NOTE: Any changes or modifications to the printer that are not expressly approved by HP could void the user's authority to operate this equipment.

Use of a shielded interface cable is required to comply with the Class B limits of Part 15 of FCC rules.

Downloaded from www.Manualslib.com manuals search engine

Environmental product stewardship program

Protecting the environment

Hewlett-Packard Company is committed to providing quality products in an environmentally sound manner. This product has been designed with several attributes to minimize impacts on our environment.

Ozone production

This product generates no appreciable ozone gas (O_3).

Power consumption

Power usage drops significantly while in Ready and Sleep mode, which saves natural resources and saves money without affecting the high performance of this product. To determine the ENERGY STAR® qualification status for this product, see the Product Data Sheet or Specifications Sheet. Qualified products are also listed at:

www.hp.com/go/energystar

Toner consumption

EconoMode uses less toner, which might extend the life of the print cartridge.

Paper use

This product's optional automatic duplex feature (two-sided printing) and N-up printing (multiple pages printed on one page) capability can reduce paper usage and the resulting demands on natural resources.

Plastics

Plastic parts over 25 grams are marked according to international standards that enhance the ability to identify plastics for recycling purposes at the end of the product's life.

HP LaserJet print supplies

It's easy to return and recycle your HP LaserJet print cartridges after use—free of charge—with HP Planet Partners. Multilingual program information and instructions are included in every new HP LaserJet print cartridge and supplies package. You help reduce the toll on the environment further when you return multiple cartridges together rather than separately.

HP is committed to providing inventive, high-quality products and services that are environmentally sound, from product design and manufacturing to distribution, customer use and recycling. When you participate in the HP Planet Partners program, we ensure your HP LaserJet print cartridges are recycled properly, processing them to recover plastics and metals for new products and diverting millions of tons of waste from landfills. Since this cartridge is being recycled and used in new materials, it will not be returned to you. Thank you for being environmentally responsible!

NOTE: Use the return label to return original HP LaserJet print cartridges only. Please do not use this label for HP inkjet cartridges, non-HP cartridges, refilled or remanufactured cartridges or warranty returns. For information about recycling your HP inkjet cartridges please go to http://www.hp.com/recycle.

Downloaded from www.Manualslib.com manuals search engine

Return and recycling instructions

United States and Puerto Rico

The enclosed label in the HP LaserJet toner cartridge box is for the return and recycling of one or more HP LaserJet print cartridges after use. Please follow the applicable instructions below.

Multiple returns (more than one cartridge)

1. Package each HP LaserJet print cartridge in its original box and bag.
2. Tape the boxes together using strapping or packaging tape. The package can weigh up to 31 kg (70 lb).
3. Use a single pre-paid shipping label.

OR

1. Use your own suitable box, or request a free bulk collection box from www.hp.com/recycle or 1-800-340-2445 (holds up to 31 kg (70 lb) of HP LaserJet print cartridges).
2. Use a single pre-paid shipping label.

Single returns

1. Package the HP LaserJet print cartridge in its original bag and box.
2. Place the shipping label on the front of the box.

Shipping

For all HP LaserJet print cartridge recycling returns, give the package to UPS during your next delivery or pickup, or take it to an authorized UPS drop-off center. For the location of your local UPS drop-off center, call 1-800-PICKUPS or visit www.ups.com. If you are returning via USPS label, give the package to a U.S. Postal Service carrier or drop off at a U.S. Postal Service Office. For more information, or to order additional labels or boxes for bulk returns, visit www.hp.com/recycle or call 1-800-340-2445. Requested UPS pickup will be charged normal pickup rates. Information subject to change without notice.

Residents of Alaska and Hawaii

Do not use the UPS label. Call 1-800-340-2445 for information and instructions. The U.S. Postal Service provides no-cost cartridge return transportation services under an arrangement with HP for Alaska and Hawaii.

Non-U.S. returns

To participate in HP Planet Partners return and recycling program, just follow the simple directions in the recycling guide (found inside the packaging of your new product supply item) or visit www.hp.com/recycle. Select your country/region for information on how to return your HP LaserJet printing supplies.

Paper

This product is capable of using recycled papers when the paper meets the guidelines outlined in the *HP LaserJet Printer Family Print Media Guide*. This product is suitable for the use of recycled paper according to EN12281:2002.

Downloaded from www.Manualslib.com manuals search engine

Material restrictions

This HP product does not contain added mercury.

This HP product contains a battery that might require special handling at end-of-life. The batteries contained in or supplied by Hewlett-Packard for this product include the following:

HP LaserJet P3010 Series	
Type	Carbon monofluoride lithium
Weight	1.5 g
Location	On formatter board
User-removable	No

廢電池請回收

For recycling information, you can go to www.hp.com/recycle, or contact your local authorities or the Electronics Industries Alliance: www.eiae.org.

Disposal of waste equipment by users in private households in the European Union

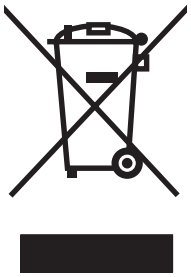

This symbol on the product or on its packaging indicates that this product must not be disposed of with your other household waste. Instead, it is your responsibility to dispose of your waste equipment by handing it over to a designated collection point for the recycling of waste electrical and electronic equipment. The separate collection and recycling of your waste equipment at the time of disposal will help to conserve natural resources and ensure that it is recycled in a manner that protects human health and the environment. For more information about where you can drop off your waste equipment for recycling, please contact your local city office, your household waste disposal service or the shop where you purchased the product.

Chemical substances

HP is committed to providing our customers with information about the chemical substances in our products as needed to comply with legal requirements such as REACH (Regulation EC No 1907/2006 of the European Parliament and the Council). A chemical information report for this product can be found at: www.hp.com/go/reach.

Downloaded from www.Manualslib.com manuals search engine

Material Safety Data Sheet (MSDS)

Material Safety Data Sheets (MSDS) for supplies containing chemical substances (for example, toner) can be obtained by accessing the HP Web site at www.hp.com/go/msds or www.hp.com/hpinfo/community/environment/productinfo/safety.

For more information

To obtain information about these environmental topics:

- Product environmental profile sheet for this and many related HP products
- HP's commitment to the environment
- HP's environmental management system
- HP's end-of-life product return and recycling program
- Material Safety Data Sheets

Visit www.hp.com/go/environment or www.hp.com/hpinfo/globalcitizenship/environment.

Downloaded from www.Manualslib.com manuals search engine

Declaration of conformity

Declaration of Conformity

according to ISO/IEC 17050-1 and EN 17050-1, DoC#: BOISB-0804-00-rel.1.0

Manufacturer's Name:	Hewlett-Packard Company
Manufacturer's Address:	11311 Chinden Boulevard, Boise, Idaho 83714-1021, USA

declares, that the product

Product Name:	HP LaserJet P3010 series Including: CB530A - Optional 500-sheet tray
Regulatory Model Number[2]:	BOISB-0804-00
Product Options:	ALL Print Cartridges: CE255A /CE255X

conforms to the following Product Specifications:

Safety:	IEC 60950-1:2001 / EN60950-1: 2001 +A11 IEC 60825-1:1993 +A1 +A2 / EN 60825-1:1994 +A1 +A2 (Class 1 Laser/LED Product) GB4943-2001
EMC:	CISPR22:2005 / EN 55022:2006 - Class B[1] EN 61000-3-2:2006 EN 61000-3-3:1995 +A1 EN 55024:1998 +A1 +A2 FCC Title 47 CFR, Part 15 Class B[2] / ICES-003, Issue 4 GB9254-1998, GB17625.1-2003

Supplementary Information:

The product herewith complies with the requirements of the EMC Directive 2004/108/EC and the Low Voltage Directive 2006/95/EC, and carries the CE-Marking CE accordingly.

This Device complies with Part 15 of the FCC Rules. Operation is subject to the following two conditions: (1) this device may not cause harmful interference, and (2) this device must accept any interference received, including interference that may cause undesired operation.

1) The product was tested in a typical configuration with Hewlett-Packard Personal Computer Systems.

2) For regulatory purposes, this product is assigned a Regulatory model number. This number should not be confused with the marketing name or the product number(s).

Boise, Idaho , USA

May 30, 2008

For regulatory topics only:

European Contact:	Your Local Hewlett-Packard Sales and Service Office or Hewlett-Packard GmbH, Department HQ-TRE / Standards Europe,, Herrenberger Strasse 140, , D-71034, Böblingen, (FAX: +49-7031-14-3143), http://www.hp.com/go/certificates
USA Contact:	Product Regulations Manager, Hewlett-Packard Company,, PO Box 15, Mail Stop 160, Boise, ID 83707-0015, , (Phone: 208-396-6000)

Downloaded from www.Manualslib.com manuals search engine

Safety statements

Laser safety

The Center for Devices and Radiological Health (CDRH) of the U.S. Food and Drug Administration has implemented regulations for laser products manufactured since August 1, 1976. Compliance is mandatory for products marketed in the United States. The device is certified as a “Class 1” laser product under the U.S. Department of Health and Human Services (DHHS) Radiation Performance Standard according to the Radiation Control for Health and Safety Act of 1968. Since radiation emitted inside the device is completely confined within protective housings and external covers, the laser beam cannot escape during any phase of normal user operation.

⚠ **WARNING!** Using controls, making adjustments, or performing procedures other than those specified in this user guide may result in exposure to hazardous radiation.

Canadian DOC regulations

Complies with Canadian EMC Class B requirements.

« Conforme à la classe B des normes canadiennes de compatibilité électromagnétiques. « CEM ». »

VCCI statement (Japan)

この装置は、情報処理装置等電波障害自主規制協議会（ＶＣＣＩ）の基準に基づくクラスＢ情報技術装置です。この装置は、家庭環境で使用することを目的としていますが、この装置がラジオやテレビジョン受信機に近接して使用されると、受信障害を引き起こすことがあります。
取扱説明書に従って正しい取り扱いをして下さい。

Power cord statement (Japan)

製品には、同梱された電源コードをお使い下さい。
同梱された電源コードは、他の製品では使用出来ません。

EMC statement (Korea)

B급 기기 (가정용 방송통신기기)	이 기기는 가정용(B급)으로 전자파적합등록을 한 기기로서 주로 가정에서 사용하는 것을 목적으로 하며, 모든 지역에서 사용할 수 있습니다.

Downloaded from www.Manualslib.com manuals search engine

Laser statement for Finland

Luokan 1 laserlaite

Klass 1 Laser Apparat

HP LaserJet P3015, P3015d, P3015n, P3015dn, P3015x, laserkirjoitin on käyttäjän kannalta turvallinen luokan 1 laserlaite. Normaalissa käytössä kirjoittimen suojakotelointi estää lasersäteen pääsyn laitteen ulkopuolelle. Laitteen turvallisuusluokka on määritetty standardin EN 60825-1 (1994) mukaisesti.

VAROITUS !

Laitteen käyttäminen muulla kuin käyttöohjeessa mainitulla tavalla saattaa altistaa käyttäjän turvallisuusluokan 1 ylittävälle näkymättömälle lasersäteilylle.

VARNING !

Om apparaten används på annat sätt än i bruksanvisning specificerats, kan användaren utsättas för osynlig laserstrålning, som överskrider gränsen för laserklass 1.

HUOLTO

HP LaserJet P3015, P3015d, P3015n, P3015dn, P3015x - kirjoittimen sisällä ei ole käyttäjän huollettavissa olevia kohteita. Laitteen saa avata ja huoltaa ainoastaan sen huoltamiseen koulutettu henkilö. Tällaiseksi huoltotoimenpiteeksi ei katsota väriainekasetin vaihtamista, paperiradan puhdistusta tai muita käyttäjän käsikirjassa lueteltuja, käyttäjän tehtäväksi tarkoitettuja ylläpitotoimia, jotka voidaan suorittaa ilman erikoistyökaluja.

VARO !

Mikäli kirjoittimen suojakotelo avataan, olet alttiina näkymättömällelasersäteilylle laitteen ollessa toiminnassa. Älä katso säteeseen.

VARNING !

Om laserprinterns skyddshölje öppnas då apparaten är i funktion, utsättas användaren för osynlig laserstrålning. Betrakta ej strålen. Tiedot laitteessa käytettävän laserdiodin säteilyominaisuuksista: Aallonpituus 775-795 nm Teho 5 m W Luokan 3B laser.

Downloaded from www.Manualslib.com manuals search engine

Substances Table (China)

有毒有害物质表

根据中国电子信息产品污染控制管理办法的要求而出台

部件名称	有毒有害物质和元素					
	铅 (Pb)	汞 (Hg)	镉 (Cd)	六价铬 (Cr(VI))	多溴联苯 (PBB)	多溴二苯醚 (PBDE)
打印引擎	X	0	X	0	0	0
控制面板	0	0	0	0	0	0
塑料外壳	0	0	0	0	0	0
格式化板组件	X	0	0	0	0	0
碳粉盒	X	0	0	0	0	0

3685

0：表示在此部件所用的所有同类材料中，所含的此有毒或有害物质均低于 SJ/T11363-2006 的限制要求。
X：表示在此部件所用的所有同类材料中，至少一种所含的此有毒或有害物质高于 SJ/T11363-2006 的限制要求。

注：引用的“环保使用期限”是根据在正常温度和湿度条件下操作使用产品而确定的。

Downloaded from www.Manualslib.com manuals search engine

Index

Symbols/Numerics

500-sheet tray
  configuring 87
  loading 84

A

accessibility features 7
accessories
  available 6
  ordering 200
  part numbers 201
acoustic specifications 214
address, printer
  Macintosh, troubleshooting 195
address, TCP/IPv6 32
advanced printing options
  Windows 105
alerts, e-mail 58
alternative letterhead mode 105
anticounterfeit supplies 121
AppleTalk
  disabling 70
AppleTalk settings 33

B

batteries included 219
bins, output
  capacity 79
  locating 8
  selecting 89
blank pages
  troubleshooting 189
blurred print, problem-solving 187
Bonjour Settings 58
both sides, printing on
  Macintosh 61
  Macintosh settings 58
  Show Me How menu 15
browser requirements
  embedded Web server 113
buttons, control panel 12

C

cables
  USB, troubleshooting 189
Canadian DOC regulations 222
canceling
  printing 100
canceling a print request 100
capacity of trays and bins 79
card stock
  output bin, selecting 89
cartridges
  features 6
  non-HP 121
  ordering through embedded Web server 115
  part numbers 201
  recycling 217
  replacement intervals 121
  replacing 122
  status messages 12
  storage 121
  warranty 205
cartridges, print
  Macintosh status 62
cautions 2
characters, misformed 185
cleaning
  exterior 137
clock, real-time
  setting 94
colored text
  print as black 105
configuration page
  Macintosh 58
configuration page, printing 18
configure device menu 21
connectivity
  USB 64
control panel
  buttons 12
  cleaning page, printing 137
  display 12
  lights 12
  locating 8
  messages, types of 147
  paper types 78
  security 119
  settings 46, 54
control-panel menus
  accessing 12, 14
  configure device 21
  diagnostics 38
  EIO <X> Jetdirect menu 30
  embedded Jetdirect 30
  I/O (input/output) 30
  information 18
  manage supplies 20
  paper handling 19
  PCL sub-menu 22
  Print Quality 23
  printing 21
  resets 36
  retrieve job 16
  Show Me How 15
  system setup 26
controlling print jobs 88
conventions, document 2
copies, number of
  Windows 105
counterfeit supplies 121
cover pages 59, 102
creased paper, problem-solving 186
crooked pages 185

Downloaded from www.Manualslib.com manuals search engine

curled paper, problem-solving 185
custom paper sizes 77
custom-size paper settings
Macintosh 59
customer support
embedded Web server links 115
HP Printer Utility pages 58
online 209
repacking product 210
service information form 211

D
date, setting 94
declaration of conformity 221
default gateway, setting 68
defects, repeating 188
demonstration page, printing 18
density
problem-solving 183
settings 58
device discovery 65
device status
Macintosh Services tab 62
DHCP settings 31
diagnostics
networks 34
diagnostics menu 38
dimensions, product 214
DIMMs
accessing 8
installing 126
part numbers 201
types available 126
verifying installation 130
disabling
AppleTalk 70
DLC/LLC 70
IPX/SPX 70
network protocols 70
disk
installing 135
removing 136
Disk Erase feature 117
disposal, end-of-life 219
DLC/LLC
disabling 70
DLC/LLC settings 33
DNS settings
IPV4 32
IPV6 32
document conventions 2
dots, problem-solving 183, 186
double-sided printing
Macintosh 61
Macintosh settings 58
Show Me How menu 15
dpi, settings 58
drivers
included 6
Macintosh settings 59
Macintosh, troubleshooting 195
paper types 78
presets (Macintosh) 59
settings 46, 47, 54, 56
shortcuts (Windows) 101
supported, Windows 43
universal 44
Windows, opening 101
dropouts, problem-solving 183
duplex printing
Macintosh 61
Windows 103
duplex settings, changing 71
duplexer
Macintosh settings 58
Show Me How menu 15

E
e-mail alerts 58
EconoMode setting 92
economy settings 92
EIO <X> Jetdirect menu 30
EIO cards
installing 135
part numbers 202
removing 136
settings 30
electrical specifications 214
embedded Jetdirect menu 30
embedded Web server
assigning a password 117
features 113
Macintosh 58
end-of-life disposal 219
envelopes
jams 180
loading orientation 81
output bin, selecting 89
wrinkled, problem-solving 186
environment for product specifications 214
environment for the product problem-solving 182
environmental features 5
environmental stewardship program 217
EPS files, troubleshooting 196
erasing hard disk 117
error messages
e-mail alerts 58
lights, control panel 12
types of 147
errors
software 193
Ethernet cards, part numbers 202
European Union, waste disposal 219
Explorer, versions supported
embedded Web server 113

F
FastRes 6
features 3, 6
file directory, printing 18
File Upload, Macintosh 58
Finnish laser safety statement 223
Firmware Update, Macintosh 58
firmware, upgrading 138
first page
use different paper 59
font list, printing
PCL 18
PS 18
fonts
EPS files, troubleshooting 196
included 6
permanent resources 130
Upload Macintosh 58
formatter
security 120
fraud hotline 121

G
gateway, setting default 68

Downloaded from www.Manualslib.com manuals search engine

General Protection FaultException OE 194
gray background, problem-solving 184

H

hard disk
  erasing 117
hard disks
  encrypted 118
hardware integration pocket 118
heavy paper
  output bin, selecting 89
Help button, control panel 13
help, Show Me How menu 15
HP Customer Care 209
HP Easy Printer Care
  description 50
  downloading 50
  opening 110
  options 111
  supported browsers 50
  supported operating systems 50
HP fraud hotline 121
HP Jetdirect print server
  firmware updates 141
  installing 135
  part numbers 202
  removing 136
HP Printer Utility 57, 58
HP Universal Print Driver 44
HP Web Jetadmin
  firmware updates 140
HP-UX software 51
humidity
  problem-solving 182
  specifications 214

I

I/O (input/output) menu 30
Illegal Operation errors 194
image defects, problem-solving 183
image repetition, problem-solving 187
information menu 18
information pages
  printing 108
Information tab, embedded Web server 114
input trays
  configuring 19
installing
  EIO cards 135
  memory (DIMMs) 126
  USB devices 132
interface ports, locating 9
Internet Explorer, versions supported
  embedded Web server 113
IP address
  IPv4 31
  Macintosh, troubleshooting 195
IP addressing, network 66
IP Security 117
IPsec 117
IPv4 address 68
IPV4 settings 31
IPv6 address 69
IPV6 settings 32
IPX/SPX
  disabling 70
IPX/SPX settings 33

J

jams
  common causes of 162
  envelopes 180
  print quality after 182
  recovery 176
  Show Me How menu 15
Japanese VCCI statement 222
Jetadmin
  firmware updates 140
Jetadmin, HP Web 49, 116
Jetdirect print server
  firmware updates 141
  installing 135
  part numbers 202
  removing 136
job storage
  accessing 96
  features 96
  Macintosh settings 61
jobs
  Macintosh settings 58
  personal 96
  proof and hold 96
  Quick Copy 96
  stored 96

K

Korean EMC statement 222

L

labels
  output bin, selecting 89
landscape orientation
  setting, Windows 103
laser safety statements 222, 223
letterhead paper, loading 105
license, software 206
light print
  problem-solving 183
lights, control panel 12
lines, problem-solving 183, 186, 187
link speed settings 36, 71
Linux software 51
loading
  500-sheet tray 84
  Show Me How menu 15
  Tray 1 82
  Tray 2 84
Lock Resources, Macintosh 58
loose toner, problem-solving 184

M

Macintosh
  AppleTalk 70
  driver settings 56, 59
  drivers, troubleshooting 195
  embedded web server 58
  HP Printer Utility 57
  problems, troubleshooting 195
  removing software 54
  resize documents 59
  software 57
  support 209
  supported operating systems 54
  USB card, troubleshooting 196
Macintosh driver settings
  custom-size paper 59
  Job Storage 61

Downloaded from www.Manualslib.com manuals search engine

Services tab 62
watermarks 60
manage supplies menu 20
management, network 65
managing network 67
material restrictions 219
Material Safety Data Sheet (MSDS) 220
media
automatically selecting trays 88
capacity of trays and bins 79
custom-size, Macintosh settings 59
first page 59
loading 500-sheet tray 84
loading Tray 1 82
loading Tray 2 84
pages per sheet 60
Show Me How menu 15
supported sizes 75
supported types 78
memory
included 57
installing DIMMs 126
part numbers 201
permanent resources 130
upgrading 126
verifying installation 130
memory DIMMs
security 120
menu map, printing 18
menus, control-panel
accessing 12, 14
configure device 21
diagnostics 38
EIO <X> Jetdirect menu 30
embedded Jetdirect 30
I/O (input/output) 30
information 18
manage supplies 20
paper handling 19
PCL sub-menu 22
Print Quality 23
printing 21
resets 36
retrieve job 16
Show Me How 15
system setup 26
mercury-free product 219
messages
e-mail alerts 58
lights, control panel 12
types of 147
messaging, network 65
misformed characters, problem-solving 185
models, feature comparison 3
multiple pages per sheet
Windows 103

N

n-up printing
Windows 103
Netscape Navigator, versions supported
embedded Web server 113
network
password, changing 67
password, setting 67
settings, changing 67
settings, viewing 67
Networking tab, embedded Web server 115
networks
AppleTalk 70
configuring 65
default gateway 68
device discovery 65
diagnostics 34
disabling protocols 70
HP Web Jetadmin 116
IP addressing 66
IPv4 address 68
IPv6 address 69
link speed settings 36
Macintosh settings 58
messaging and management 65
protocols 30
protocols supported 65
security 30, 66
settings 30
subnet mask 68
non-HP supplies 121
notes 2

O

on/off button, locating 8
online support 209
operating environment specifications 214
operating systems supported
Windows 42
ordering
part numbers for 201
supplies and accessories 200
supplies through embedded Web server 115
orientation
setting, Windows 103
output quality. *See* print quality

P

packaging product 210
page order, changing 105
pages
blank 189
not printing 189
printing slowly 189
pages per sheet
Windows 103
paper
automatically selecting trays 88
capacity of trays and bins 79
covers, using different paper 102
curled 185
custom size, selecting 102
custom sizes 77
custom-size, Macintosh settings 59
first and last pages, using different paper 102
first page 59
loading 500-sheet tray 84
loading Tray 1 82
loading Tray 2 84
pages per sheet 60
problem-solving 182
Show Me How menu 15
size, selecting 102
skewed 185
supported sizes 75
supported types 78
type, selecting 102
wrinkled 186
paper handling menu 19
paper, ordering 200

Downloaded from www.Manualslib.com manuals search engine

part numbers
cables 202
EIO cards 202
memory 201
print cartridges 201
trays 201
pausing a print request 100
PCL drivers
supported, Windows 43
universal 44
PCL font list, printing 18
PCL sub-menu 22
PDF files, printing 126
permanent resources 130
personal jobs 96
physical specifications 214
portrait orientation
setting, Windows 103
ports
supported 6
troubleshooting
Macintosh 196
ports, interface
locating 9
postcards
output bin, selecting 89
PostScript Printer Description (PPD) files
included 57
power
consumption 214
troubleshooting 144
power button, locating 8
PPDs
included 57
presets (Macintosh) 59
print cartridge
managing 121
print cartridges
features 6
Macintosh status 62
non-HP 121
ordering through embedded Web server 115
part numbers 201
recycling 217
replacement intervals 121
replacing 122
status messages 12
storage 121
warranty 205
print on both sides
Macintosh 61
Windows 103
print quality
blurred 187
dropouts 183
environment 182
gray background 184
image defects 183
jams, after 182
light print 183
lines 183
loose toner 184
misformed characters 185
paper 182
problem-solving 182
repeating defects 184
repetitive images 187
scattered lines 187
smeared toner 184
specks 183
tire tracks 186
white lines 186
white spots 186
Print Quality menu 23
print tasks 99
printer settings
configuring 21
printing
from USB storage accessories 98
troubleshooting 189
printing menu 21
priority, settings 46, 54
private jobs
Windows 104
problem-solving
blurred print 187
curled paper 185
dropouts 183
e-mail alerts 58
environment 182
gray background 184
image defects 183
light print 183
lines 183, 186
messages, types of 147
networks 34
output quality 182
paper 182
repeating defects 184
repetitive images 187
scattered lines 187
skewed pages 185
smeared toner 184
specks 183
text quality 185, 187
tire tracks 186
white spots 186
Windows issues 194
wrinkled paper 186
processor speed 6
product comparison 3
product status
HP Easy Printer Care 111
proof and hold
Windows 104
proof and hold jobs 96
ProRes 6
protocols, network 30, 65
proxy server settings 33
PS Emulation drivers
supported, Windows 43
PS font list, printing 18

Q

quality. *See* print quality
Quick Copy jobs 96

R

real-time clock 94
rear output bin
locating 8
printing to 89
recycling
HP printing supplies returns and environmental program 218
remote firmware update (RFU) 138
removing Macintosh software 54
repacking product 210
repeating defects, problem-solving 184, 187
repeating defects, troubleshooting 188
replacing printing cartridges 122
resets menu 36

Downloaded from www.Manualslib.com manuals search engine

resize documents
Macintosh 59
Windows 102
resolution
features 6
problem-solving quality 182
settings 58
Resolution Enhancement technology (REt) 58
resource saving 130
REt (Resolution Enhancement technology) 58
retention, job
accessing 96
features 96
retrieve job menu 16
right-side panel, locating 8
rough paper
output bin, selecting 89
ruler, repetitive defect 188

S

safety statements 222, 223
saving resources, memory 130
scale documents
Macintosh 59
Windows 102
Secure Disk Erase 117
security
disk erase 117
encrypted hard disk 118
hardware integration pocket 118
network 66
settings 30
security features 7, 117
service
information form 211
repacking product 210
Services tab
Macintosh 62
settings
driver presets (Macintosh) 59
drivers 47, 56
priority 46, 54
Settings tab, embedded Web server 115
shipping product 210
shortcuts 101
Show Me How menu 15
show-me-how pages
printing 108
SIMMs, incompatibility 126
skewed pages 185
sleep delay
changing settings 93
disabling 93
enabling 93
time 93
sleep mode 93
small paper
output bin, selecting 89
smeared toner, problem-solving 184
software
embedded Web server 49
embedded Web server, Macintosh 58
HP Easy Printer Care 50, 110
HP Printer Utility 57
HP Web Jetadmin 49
Macintosh 57
problems 193
settings 46, 54
software license agreement 206
supported operating systems 54
supported operating systems, Windows 42
uninstalling for Windows 48
uninstalling Macintosh 54
Solaris software 51
solving
direct-connect problems 190
network problems 190
walk-up USB printing problems 191
special media
guidelines 80
special paper
guidelines 80
specifications
electrical and acoustic 214
features 6
operating environment 214
physical 214
specks, problem-solving 183, 186
Spool32 errors 194
spots, problem-solving 183, 186
status
embedded Web server 114
HP Easy Printer Care 111
HP Printer Utility, Macintosh 58
Macintosh services tab 62
messages, types of 147
status, supplies
control panel messages 12
stopping a print request 100
storage, job
accessing 96
features 96
Macintosh settings 58, 61
store jobs
Windows 104
stored jobs
creating 96
deleting 97
printing 96
security 118
storing
print cartridges 121
straight-through paper path 89
subnet mask 68
supplies
counterfeit 121
managing 20
non-HP 121
ordering 200
ordering through embedded Web server 115
part numbers 201
recycling 217
replacement intervals 121
replacing print cartridges 122
status, viewing with embedded Web server 114
status, viewing with HP Printer Utility 58
supplies status
control panel messages 12
supplies status page, printing 18
supplies, status
HP Easy Printer Care 111
supply messages
configuring 20

Downloaded from www.Manualslib.com manuals search engine

supply-status, Services tab
Macintosh 62
Windows 104
support
embedded Web server links 115
HP Printer Utility pages 58
online 104, 209
repacking product 210
service information form 211
supported media 75
system requirements
embedded Web server 113
system setup menu 26

T

TCP/IP
manually configuring IPv4 parameters 68
manually configuring IPv6 parameters 69
TCP/IP settings 30
technical support
online 209
repacking product 210
service information form 211
temperature specifications 214
tests
networks 34
text, problem-solving
blurred 187
misformed characters 185
time clock, setting real- 94
tips 2
tire tracks, problem-solving 186
toner
density setting 58
output quality, problem-solving 184
toner cartridges. *See* print cartridges
top output bin
locating 8
printing to 89
transparencies
output bin 89
Tray 1
configuring 87
double-sided printing, Macintosh 61
loading 82
paper orientation 81
Tray 2
configuring 87
loading 84
Tray 3
physical specifications 214
trays
capacity 79
configuring 87
double-sided printing, Macintosh 61
locating 8
Macintosh settings 58
paper orientation 81
part numbers 201
Show Me How menu 15
trays, input
configuring 19
trays, status
HP Easy Printer Care 111
troubleshooting
blank pages 189
checklist 144
direct-connect problems 190
duplexing 181
EPS files 196
Macintosh problems 195
network problems 190
pages not printing 189
pages printing slowly 189
paper handling problems 177
repeating defects 188
Show Me How menu 15
transparencies 179
USB cables 189
walk-up USB printing problems 191
two-sided printing
Macintosh 61
Macintosh settings 58
Show Me How menu 15
Windows 103

U

uninstalling Macintosh software 54
uninstalling Windows software 48
universal print driver 44
UNIX software 51
upgrading firmware 138
upgrading memory 126
usage page, printing 18
USB cable, part number 202
USB configuration 64
USB devices
installing 132
USB port
supported 6
troubleshooting 189
troubleshooting Macintosh 196
USB storage accessories
printing from 98

W

wake time
changing 94
setting 94
walk-up USB printing 98
warnings 2
warranty
customer self repair 208
license 206
print cartridges 205
product 204
watermarks
Windows 102
wavy paper, problem-solving 185
Web browser requirements
embedded Web server 113
Web Jetadmin
firmware updates 140
Web sites
customer support 209
fraud reports 121
HP Web Jetadmin, downloading 116
Macintosh customer support 209
Material Safety Data Sheet (MSDS) 220
universal print driver 44
weight, product 214
white lines or spots, problem-solving 186
Windows
driver settings 47

Downloaded from www.Manualslib.com manuals search engine

drivers supported 43
problem-solving issues 194
supported operating systems 42
universal print driver 44
wrinkled paper, problem-solving 186

Downloaded from www.Manualslib.com manuals search engine

Downloaded from www.Manualslib.com manuals search engine

© 2009 Hewlett-Packard Development Company, L.P.

www.hp.com

CE524-90910

Downloaded from www.Manualslib.com manuals search engine